THIS DRAWING IS UNPUBLISHED. RELEASED FOR PUBLICATION 20
© COPYRIGHT 20 BY - ALL RIGHTS RESERVED.

LOC	DIST
FX	00

REVISIONS

P	LTR	DESCRIPTION	DATE	DWN	APVD
	BH	REVISED PER ECO-11-024643	08DEC2011	DLD	WTW
	BJ	REVISED PER ECO-12-010178	05JUN2012	DLD	WTW
	BK	REVISED PER ECO-12-017169	28SEP2012	DLD	WTW

KEYING OPTIONS
SCALE 2:1

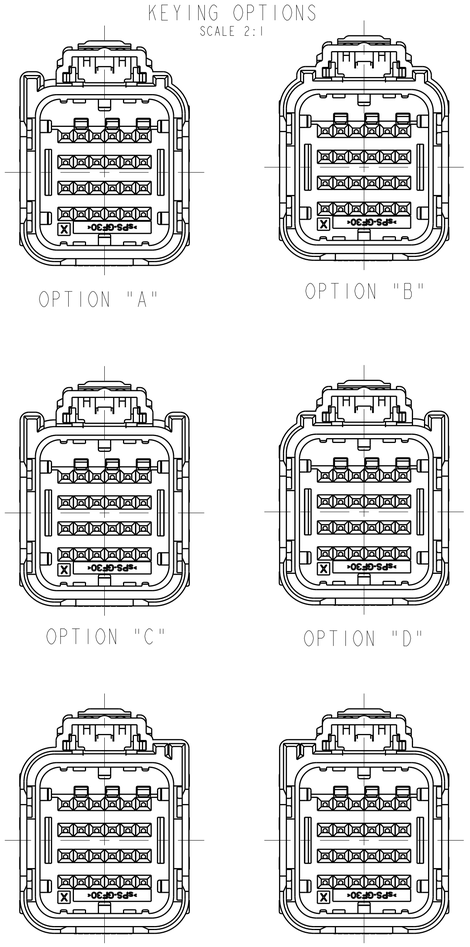

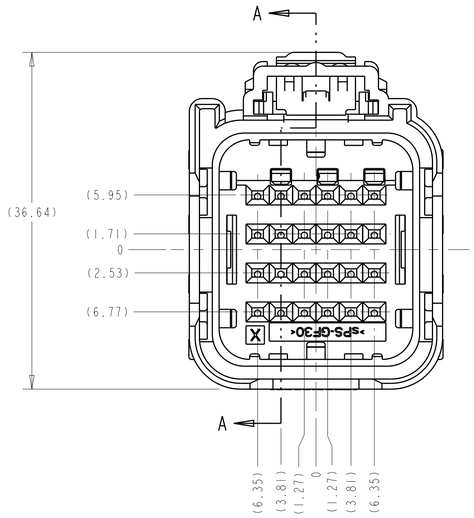

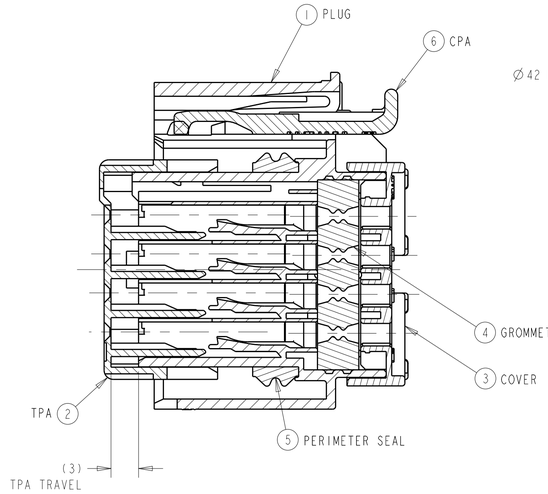

SECTION A-A
SHOWN WITH TPA IN
IT'S PRE-LOADED POSITION
(DELIVERY CONDTION)

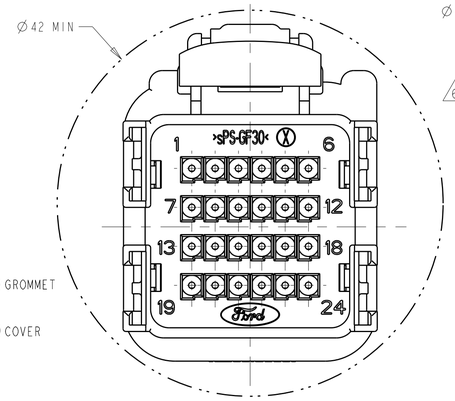

MINIMUM FEED THROUGH CONDITION
WITH 1mm CLEARANCE ALL AROUND

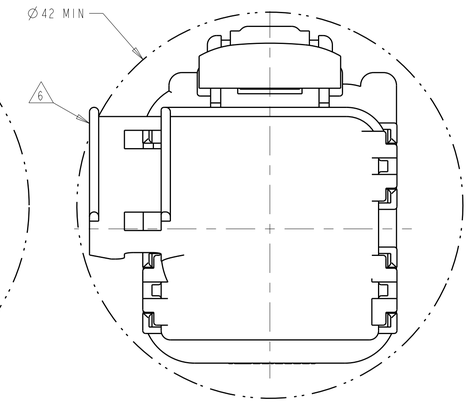

MINIMUM FEED THROUGH CONDITION
WITH 1mm CLEARANCE ALL AROUND
SHOWN WITH OPTION WIRESHIELD

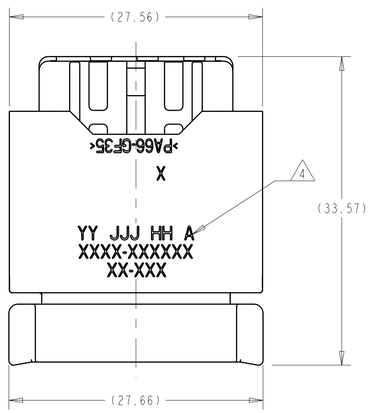

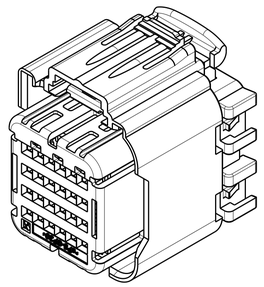

SCALE 2:1

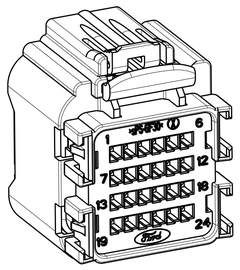

SCALE 2:1

1. APPLICABLE TERMINAL PART NUMBERS (SOLD SEPARATELY):
   FOR TIN APPLICATIONS: 1393367 AND 1393366.
   FOR GOLD APPLICATIONS: 1393365 AND 1393364.
   FOR TERMINATION AND REELING OPTIONS
   SEE DRAWINGS 1393367, 1393366, 1393365, AND 1393364.
2. COMPATIBLE WIRE SIZES FOR MAT SEAL DESIGN 1.19 TO 2.06 O.D.
   (22-18 AWG, 0.35-0.75 mm2)
3. TPA IS SHIPPED IN IT'S PRE-LOADED POSITION. ALL ASSEMBLIES ARE
   TO BE TRAY PACKAGED.
4. CUSTOMER PART NUMBER AND TRACEABILITY CODE (YY = TWO DIGIT YEAR,
   JJJ = JULIAN DAY, HH = TWO DIGIT MILITARY HOUR, A = ASSEMBLY
   PROCESS USED) ARE PRINTED IN THIS LOCATION.
5. PART ASSEMBLY WEIGHT WITHOUT TERMINALS AND WITH STANDARD PIN-OUT
   CONFIGURATION IS 14.39 GRAMS.
6. OPTIONAL WIRESHIELD P/N 7-1419157-8 (SOLD SEPARATELY). PLEASE CONTACT
   YOUR TE SALES REPRESENTATIVE FOR AVAILABILITY AND PRICING.

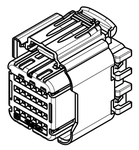

SCALE 1:1

KEYING OPTION "A" SHOWN

ASSEMBLY PART NUMBERS

| 1-1438103-7 | 1-1438103-6 | 1-1438103-5 | 1-1438356-2 | 2-1438095-3 | 1-1438103-4 | 1438582-3 | 1-1438356-1 | 1-1438096-4 | 1-1438103-3 | 1-1438356-0 | 2-1438095-2 | 1-1438096-3 | 1-1438096-2 | 1-1438096-1 | 1438583-3 | 1438583-2 | 1438583-1 | 1438582-2 | 1438582-1 | 1-1438103-2 | 2-1438095-1 | 2-1438095-0 | 1-1438095-9 | 1-1438103-1 | 1-1438095-8 | 1-1438095-7 | 1-1438103-0 | 2-1438103-0 | 1438356-9 | 1438356-8 | 1438103-9 | 1-1438095-6 | 1-1438095-5 | 1-1438095-4 | 1438356-7 | 1438356-6 | 1438356-5 | 1438356-4 | 1-1438095-3 | 1-1438095-2 | 1438103-8 | 1438356-3 | 1-1438095-1 | 1438356-2 | 1438356-1 | 1-1438096-0 | 1438096-9 | 1438096-8 | 1438096-7 | 1438096-6 | 1438096-5 | 1438096-4 | 1438096-3 | 1438096-2 | 4-1419171-1 | 1-1438095-0 | 1438095-9 | 1438095-8 | 1438095-7 | 1438095-6 | 1438095-5 | 1438095-4 | 1438095-3 | 1438095-2 | 4-1419171-0 | 1438103-7 | 1438103-6 | 1438103-5 | 1438103-4 | 1438103-3 | 1438103-2 | 1438103-1 | 7-1419157-7 | 3-1419171-9 | ITEM | DESCRIPTION | MATERIAL | FINISH/COLOR |
|---|---|---|---|---|---

THIS DRAWING IS UNPUBLISHED. RELEASED FOR PUBLICATION 20
© COPYRIGHT 20 BY - ALL RIGHTS RESERVED.

LOC	DIST
FX	00

REVISIONS

P	LTR	DESCRIPTION	DATE	DWN	APVD
	-	SEE SHEET 1	-	-	-

ASSEMBLY PART NUMBERS

2098672-1	2035010-2	2035010-1	2035009-3	2035009-2	2035009-1	2035008-3	2035008-2	2035008-1	2035007-2	2035007-1	3-1438103-6	3-1438103-5	3-1438103-4	3-1438103-3	3-1438103-2	3-1438103-1	3-1438103-0	2-1438103-9	2-1438103-8	2-1438103-7	2-1438103-6	2-1438103-5	2-1438103-4	2-1438103-3	2-1438103-2	1-1438356-9	1-1438356-8	1-1438356-7	1-1438356-6	1-1438356-5	1-1438356-4	1438582-5	1438582-4	1-1438096-8	1-1438096-5	1-1438356-3	1-1438103-9	1-1438103-8	ITEM	DESCRIPTION	MATERIAL	FINISH/COLOR
1	1	1	1	1	1	1	1	1	1	1	1	1	1	1	1	1	1	1	1	1	1	1	1	1	1	1	1	1	1	1	1	1	1	1	1	1	1	1	6	CPA	PBT 15% GF	RED
1	1	1	1	1	1	1	1	1	1	1	1	1	1	1	1	1	1	1	1	1	1	1	1	1	1	1	1	1	1	1	1	1	1	1	1	1	1	1	5	PERIMETER SEAL	SILICONE	GREEN
1	1	1	1	1	1	1	1	1	1	1	1	1	1	1	1	1	1	1	1	1	1	1	1	1	1	1	1	1	1	1	1	1	1	1	1	1	1	1	4	GROMMET	SILICONE	BROWN
1	1	1	1	1	1	1	1	1	1	1	1	1	1	1	1	1	1	1	1	1	1	1	1	1	1	1	1	1	1	1	1	1	1	1	1	1	1	1	3	COVER	PA66 35% GF	BLACK
1	1	1	1	1	1	1	1	1	1	1	1	1	1	1	1	1	1	1	1	1	1	1	1	1	1	1	1	1	1	1	1	1	1	1	1	1	1	1	2	TPA WITH 3 SHORTING BAR POSITIONS CONFIGURATION	sPS 30% GF	RED
			1	1	1																																		1	PLUG WITH KEYING OPTION "F" AND 3 SHORTING BAR POSITIONS CONFIGURATION	PA66 35% GF	BLACK
																																1	1						1	PLUG WITH KEYING OPTION "E" AND 3 SHORTING BAR POSITIONS CONFIGURATION	PA66 35% GF	BLACK
	1	1																								1	1	1	1	1	1					1			1	PLUG WITH KEYING OPTION "D" AND 3 SHORTING BAR POSITIONS CONFIGURATION	PA66 35% GF	BLACK
									1	1																								1	1				1	PLUG WITH KEYING OPTION "C" AND 3 SHORTING BAR POSITIONS CONFIGURATION	PA66 35% GF	NATURAL
																																							1	PLUG WITH KEYING OPTION "B" AND 3 SHORTING BAR POSITIONS CONFIGURATION	PA66 35% GF	BLACK
1						1	1	1			1	1	1	1	1	1	1	1	1	1	1	1	1	1	1											1	1	1	PLUG WITH KEYING OPTION "A" AND 3 SHORTING BAR POSITIONS CONFIGURATION	PA66 35% GF	GRAY
QUANTITY																																										

THIS DRAWING IS A CONTROLLED DOCUMENT.

DIMENSIONS: mm

TOLERANCES UNLESS OTHERWISE SPECIFIED:
0 PLC ±-
1 PLC ±0.3
2 PLC ±0.10
3 PLC ±-
4 PLC ±-
ANGLES ±3°

MATERIAL - SEE CHART ABOVE

FINISH - -

DWN	M. FORISKA	16APR2002
CHK	M. FORISKA	16APR2002
APVD	A. VALASEK	16APR2002

PRODUCT SPEC -

APPLICATION SPEC -

WEIGHT -

TE Connectivity

NAME 24 WAY ARM, PLUG ASSEMBLY WITHOUT SHORTING BARS, CUSTOMER SPEC.

SIZE	CAGE CODE	DRAWING NO	RESTRICTED TO
A1	00779	C-3-1419157-9	-

CUSTOMER DRAWING

SCALE 3:1 SHEET 2 OF 3 REV BK

4805 (3/11)

THIS DRAWING IS UNPUBLISHED. RELEASED FOR PUBLICATION 20
© COPYRIGHT 20 BY - ALL RIGHTS RESERVED.

LOC	DIST
FX	00

REVISIONS

P	LTR	DESCRIPTION	DATE	DWN	APVD
	-	SEE SHEET 1	-	-	-

PIN-OUT CHART

1	2	3	4	5	6	7	8	9	10	11	12	13	14	15	16	17	18	19	20	21	22	23	24	ASSEMBLY PART NUMBER	PLUG KEYING OPTION
				5	6					11	12											23		3-1438103-6	KEY "A"
1	2			5	6	7	8			11	12			15	16	17	18			21	22			3-1438103-5	KEY "A"
	2			5	6					11	12	13	14	15			18	19		21	22	23	24	1438582-5	KEY "E"
						7	8										18			21	22			1-1438356-9	KEY "D"
																	18			21	22			1-1438356-8	KEY "D"
	2	3	4																			23		3-1438103-4	KEY "A"
	2	3	4																			23		2035008-3	KEY "A"
						7	8						14							21	22			2098672-1	KEY "A"
				5	6	7	8										18			21	22			1-1438356-7	KEY "D"
1	2			5	6	7	8			11	12			15	16						22			1-1438356-6	KEY "D"
1	2			5	6	7	8			11	12			15	16						22			3-1438103-3	KEY "A"
	2			5	6					11	12	13	14	15			18	19		21	22	23	24	1-1438096-8	KEY "C"
1	2			5	6	7	8			11	12			15						21	22			3-1438103-2	KEY "A"
				5	6																	23		3-1438103-1	KEY "A"
	2			5	6	7	8			11	12	13	14	15			18	19		21	22	23	24	3-1438103-0	KEY "A"
1	2			5	6	7	8	9	10	11	12	13	14	15	16	17	18			21	22	23		2-1438103-9	KEY "A"
1	2	3				7	8	9	10	11		13	14	15	16	17	18	19	20	21	22	23	24	2035010-2	KEY "D"
																								2035010-1	KEY "D"
1						7			10	11		13			16	17	18	19			22	23	24	2035009-3	KEY "F"
1						7			10	11		13			16			19			22			2035009-2	KEY "F"
																								2035009-1	KEY "F"
	2			5	6					11	12	13			16		18						24	2035008-2	KEY "A"
																								2035008-1	KEY "A"
	2			5	6					11	12	13		15	16		18	19			22	23	24	2035007-2	KEY "C"
																								2035007-1	KEY "C"
1	2			5	6	7	8			11	12			15		17	18			21	22	23		2-1438103-8	KEY "A"
	2			5	6					11	12	13		15			18	19			22	23	24	2-1438103-7	KEY "A"
										11	12						18			21	22			2-1438103-6	KEY "A"
										11	12										22			2-1438103-5	KEY "A"
1	2			5	6	7	8			11	12		14	15	16						22	23		1-1438356-5	KEY "D"
1	2			5	6	7	8			11	12		14	15	16						22	23		2-1438103-4	KEY "A"
	2	3	4	5	6						12	13	14	15	16		18	19		21	22	23	24	1438582-4	KEY "E"
				5	6					11	12			15			18			21	22	23		2-1438103-3	KEY "A"
1	2			5	6	7	8			11	12	13	14	15	16	17	18			21	22	23		2-1438103-2	KEY "A"
1	2			5	6	7	8	9	10	11	12			15	16	17	18			21	22	23		1-1438356-4	KEY "D"
1	2			5	6					11	12			15	16						22			1-1438096-5	KEY "C"
1	2			5	6					11	12			15	16						22			1-1438356-3	KEY "D"
																					22			1-1438103-9	KEY "A"
																	18			21	22			1-1438103-8	KEY "A"
1	2			5	6	7	8			11	12	13	14	15	16						22	23		1-1438103-7	KEY "A"
	2			5	6					11	12	13			16		18						24	1-1438103-6	KEY "A"
1	2	3	4	5	6	7	8	9	10	11	12	13	14	15	16	17	18	19	20	21	22	23	24	ASSEMBLY PART NUMBER	PLUG KEYING OPTION

TERMINAL HOLE POSITION

CAVITIES WITH A NUMERIC SYMBOL INDICATE CLOSED TERMINAL HOLE POSITIONS

BLANK CAVITIES INDICATE OPEN TERMINAL HOLE POSITIONS

PIN-OUT CHART

1	2	3	4	5	6	7	8	9	10	11	12	13	14	15	16	17	18	19	20	21	22	23	24	ASSEMBLY PART NUMBER	PLUG KEYING OPTION
1	2	3	4	5		7	8	9	10	11	12	13	14	15		17		19	20	21				1-1438103-5	KEY "A"
1	2			5	6	7	8			11	12			15	16	17	18			21	22	23		1-1438356-2	KEY "D"
	2	3	4	5	6						12	13	14	15	16		18	19		21	22	23	24	2-1438095-3	KEY "B"
			4	5	6				10	11	12				16	17	18				22	23	24	1-1438103-4	KEY "A"
1						7			10	11		13			16	17	18	19			22	23	24	1438582-3	KEY "E"
1	2	3				7	8	9	10	11		13	14	15	16	17	18	19	20	21	22	23	24	1-1438356-1	KEY "D"
	2			5	6					11	12	13		15			18	19			22	23	24	1-1438096-4	KEY "C"
	2			5	6					11	12	13	14	15			18	19		21	22	23	24	1-1438103-3	KEY "A"
1	2	3				7			10	11		13			16	17	18	19	20	21	22	23	24	1-1438356-0	KEY "D"
	2	3	4	5	6	7	8				12	13	14	15	16		18	19		21	22	23	24	2-1438095-2	KEY "B"
	2	3	4	5	6						12	13	14	15	16		18	19		21	22	23	24	1-1438096-3	KEY "C"
	2			5	6					11	12	13			16		18						24	1-1438096-2	KEY "C"
	2			5	6					11	12	13		15	16		18	19			22	23	24	1-1438096-1	KEY "C"
1						7			10	11		13			16	17	18	19			22	23	24	1438583-3	KEY "F"
1						7			10	11		13			16			19			22			1438583-2	KEY "F"
																								1438583-1	KEY "F"
1	2	3				7	8	9	10	11		13	14	15	16	17	18	19	20	21	22	23	24	1438582-2	KEY "E"
																								1438582-1	KEY "E"
1	2	3	4	5		7	8	9	10	11		13	14	15		17		19	20	21				1-1438103-2	KEY "A"
	2	3	4	5	6						12	13	14	15	16		18	19			22	23	24	2-1438095-1	KEY "B"
	2	3	4	5	6					11	12		14		16		18						24	2-1438095-0	KEY "B"
	2	3	4	5	6						12	13		15	16		18	19			22	23	24	1-1438095-9	KEY "B"
1						7			10	11		13			16	17	18	19			22	23	24	1-1438103-1	KEY "A"
	2	3	4	5	6					11	12		14		16		18			21				1-1438095-8	KEY "B"
					6						12	13	14	15	16		18	19		21	22	23	24	1-1438095-7	KEY "B"
1	2	3	4	5	6	7	8	9	10	11	12	13	14	15	16	17	18	19	20	21	22	23	24	1-1438103-0	KEY "A"
1	2	3				7	8	9				13	14	15		17		19	20	21				2-1438103-0	KEY "A"
																								1438356-9	KEY "D"
1	2			5	6	7	8			11	12			15	16						22	23		1438356-8	KEY "D"
1	2			5	6	7	8			11	12			15	16						22	23		1438103-9	KEY "A"
					6					11	12		14		16		18						24	1-1438095-6	KEY "B"
					6						12	13	14	15	16		18	19			22	23	24	1-1438095-5	KEY "B"
					6						12	13	14		16		18						24	1-1438095-4	KEY "B"
				5	6					11	12			15	16		18			21	22	23		1438356-7	KEY "D"
				5	6					11	12			15	16	17	18			21	22	23		1438356-6	KEY "D"
				5	6					11	12						18			21	22	23		1438356-5	KEY "D"
				5	6	7	8	9	10	11	12			15	16	17	18			21	22	23		1438356-4	KEY "D"
				5	6					11	12			15	16		18			21	22	23		1-1438095-3	KEY "B"
				5	6					11	12			15	16						22	23		1-1438095-2	KEY "B"
										11		13				17	18	19	20	21	22	23	24	1438103-8	KEY "A"
				5	6					11	12										22	23		1438356-3	KEY "D"
1	2	3	4	5	6																	23		1-1438095-1	KEY "B"
1	2	3	4	5	6										16		18					23		1-1438096-0	KEY "C"
1	2	3	4	5	6	7	8	9	10						16		18					23		1438096-9	KEY "C"
1	2	3	4	5	6												18				22	23		1438096-8	KEY "C"
1	2	3				7	8	9	10	11		13	14	15	16	17	18	19	20	21	22	23	24	1438096-7	KEY "C"
1	2	3	4	5	6										16		18				22	23		1438096-4	KEY "C"
										11		13						19	20	21	22			1438096-3	KEY "C"
																	18							1438096-2	KEY "C"
1	2	3	4	5	6											17					22	23		1-1438095-0	KEY "B"
1	2	3	4	5	6										16	17					22	23		1438095-9	KEY "B"
1	2	3	4	5	6											17					22			1438095-8	KEY "B"
1	2	3	4	5	6										16	17					22			1438095-7	KEY "B"
					6					11	12		14		16		18			21			24	1438095-6	KEY "B"
1	2	3	4	5	6																22	23		1438095-5	KEY "B"
	2	3			6	7	8				12	13		15	16		18	19		21	22	23	24	1438095-3	KEY "B"
					6						12	13		15	16		18	19			22	23	24	1438095-4	KEY "B"
1	2	3	4	5	6																22			1438095-2	KEY "B"
				5	6					11	12			15	16						22	23		1438356-2	KEY "D"
				5	6					11	12			15	16		18			21	22	23		1438103-7	KEY "A"
				5	6					11	12			15	16						22	23		1438103-6	KEY "A"
1						7				11		13				17	18	19			22	23	24	1438103-5	KEY "A"
	2	3	4	5	6						12	13	14	15	16		18	19		21	22	23	24	1438103-4	KEY "A"
1						7				11		13						19			22			1438096-5	KEY "C"
																								1438103-3	KEY "A"
1						7			10	11		13			16			19			22			1438103-2	KEY "A"
1	2	3	4	5	6											17								7-1419157-7	KEY "A"
1	2	3				7	8	9		11		13	14	15		17	18	19	20	21	22	23	24	1438096-6	KEY "C"
																								1438103-1	KEY "A"
																								1438356-1	KEY "D"
																								4-1419171-1	KEY "C"
																								4-1419171-0	KEY "B"
																								3-1419171-9	KEY "A"
1	2	3	4	5	6	7	8	9	10	11	12	13	14	15	16	17	18	19	20	21	22	23	24	ASSEMBLY PART NUMBER	PLUG KEYING OPTION

TERMINAL HOLE POSITION

CAVITIES WITH A NUMERIC SYMBOL INDICATE CLOSED TERMINAL HOLE POSITIONS

BLANK CAVITIES INDICATE OPEN TERMINAL HOLE POSITIONS

THIS DRAWING IS A CONTROLLED DOCUMENT.

DIMENSIONS: mm

TOLERANCES UNLESS OTHERWISE SPECIFIED:
0 PLC ±-
1 PLC ±0.3
2 PLC ±0.10
3 PLC ±-
4 PLC ±-
ANGLES ±3°

MATERIAL - SEE CHART ABOVE
FINISH - -

DWN	M. FORISKA	16APR2002
CHK	M. FORISKA	16APR2002
APVD	A. VALASEK	16APR2002

PRODUCT SPEC -
APPLICATION SPEC -
WEIGHT -

TE Connectivity

NAME: 24 WAY ARM, PLUG ASSEMBLY WITHOUT SHORTING BARS, CUSTOMER SPEC.

SIZE	CAGE CODE	DRAWING NO	RESTRICTED TO
A1	00779	C-3-1419157-9	-

CUSTOMER DRAWING | SCALE 3:1 | SHEET 3 OF 3 | REV BK

4805 (3/11)

Компания «ЭлектроПласт» предлагает заключение долгосрочных отношений при поставках импортных электронных компонентов на взаимовыгодных условиях!

Наши преимущества:

- Оперативные поставки широкого спектра электронных компонентов отечественного и импортного производства напрямую от производителей и с крупнейших мировых складов;
- Поставка более 17-ти миллионов наименований электронных компонентов;
- Поставка сложных, дефицитных, либо снятых с производства позиций;
- Оперативные сроки поставки под заказ (от 5 рабочих дней);
- Экспресс доставка в любую точку России;
- Техническая поддержка проекта, помощь в подборе аналогов, поставка прототипов;
- Система менеджмента качества сертифицирована по Международному стандарту ISO 9001;
- Лицензия ФСБ на осуществление работ с использованием сведений, составляющих государственную тайну;
- Поставка специализированных компонентов (Xilinx, Altera, Analog Devices, Intersil, Interpoint, Microsemi, Aeroflex, Peregrine, Syfer, Eurofarad, Texas Instrument, Miteq, Cobham, E2V, MA-COM, Hittite, Mini-Circuits,General Dynamics и др.);

Помимо этого, одним из направлений компании «ЭлектроПласт» является направление «Источники питания». Мы предлагаем Вам помощь Конструкторского отдела:

- Подбор оптимального решения, техническое обоснование при выборе компонента;
- Подбор аналогов;
- Консультации по применению компонента;
- Поставка образцов и прототипов;
- Техническая поддержка проекта;
- Защита от снятия компонента с производства.

Как с нами связаться

Телефон: 8 (812) 309 58 32 (многоканальный)
Факс: 8 (812) 320-02-42
Электронная почта: org@eplast1.ru
Адрес: 198099, г. Санкт-Петербург, ул. Калинина, дом 2, корпус 4, литера А.