ITEM	Q'TY	PART NUMBER	PART DESCRIPTION
1	1	5XX-F	T-1¾ (5mm) Flanged LED, See Pages 2 to 4
2	1	ELM1-XXX	Extruded, Self-Retaining LED Spacer

REV.	DESCRIPTION	DATE	APPROVED
F	Updated Specs.	09/23/08	M. C.
G	Added P/N Designation Note.	07/22/09	T. Y.
H	Added ELM12205SRDLT.	01/19/11	T. Y.
J	Added Tape & Reel Options.	06/06/11	T. Y.
K	Tape & Reel Design Update.	11/15/11	T. Y.
M	LED Offering List Update.	07/26/12	T. Y.
N	Removed LED Duplication From Offering List.	11/09/12	T. Y.

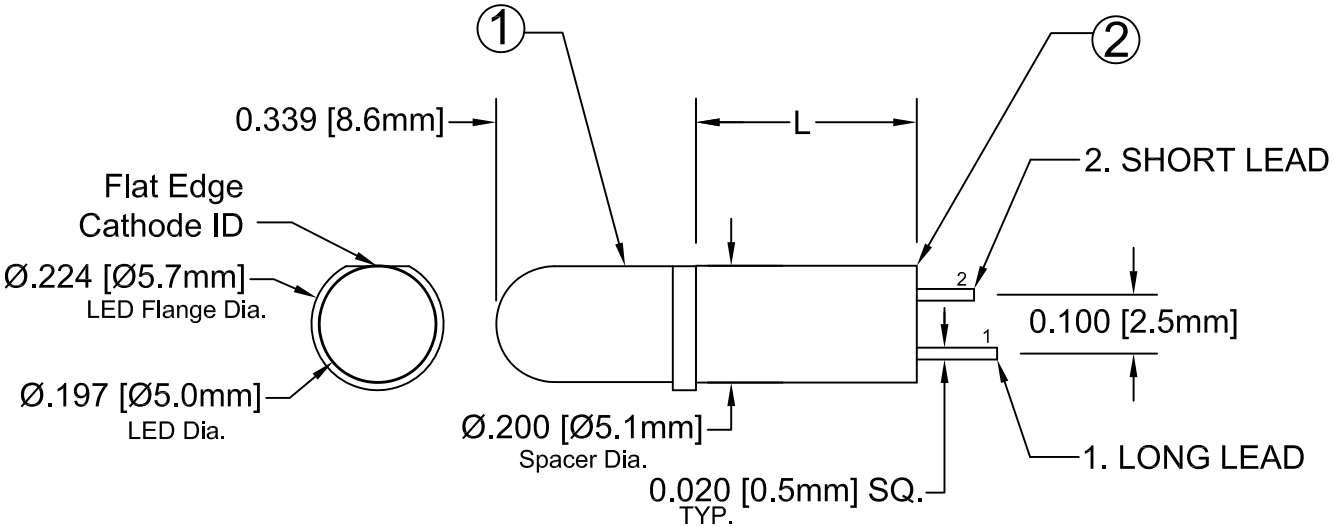

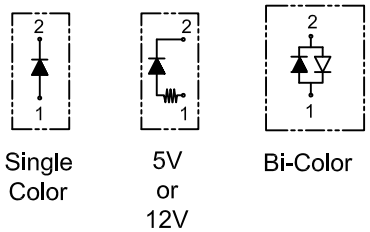

BI-COLOR POLARITY		
LED P/N	(1) Cathode	(2) Cathode
5BC-F	Green	Red
5BC-Y/G-F	Green	Yellow
5BC-R/Y-F	Yellow	Red
5BC-A/G-F	Green	Amber

E L M 1 X X X 5 X X

- 5mm LED, Emitted Color and Lens Appearance
- ELM Spacer Length "L"
  - -i.e. 0.120" length, use 120
  - -For metric, use whole number. i.e. 2MM, 10MM
- ELM Series

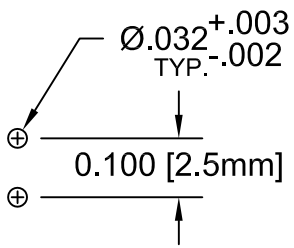

Recommended Mounting Holes

ABSOLUTE MAXIMUM RATINGS (Ta=25°C)

REVERSE VOLTAGE	5V
REVERSE CURRENT	100uA
OPERATING TEMPERATURE RANGE	−25° C – 85° C
STORAGE TEMPERATURE	−30° C – 100° C
LEAD SOLDERING TEMPERATURE(1/16" FROM BODY)	260° C FOR 5 SECONDS

STANDARD TOLERANCE
(UNLESS OTHERWISE SPECIFIED)

DECIMALS		ANGULAR
.X	± .1	X° ± 1°
.XX	± .02	
.XXX	± .010	

BIVAR®
4 THOMAS, IRVINE, CA. 92618
TEL: (949) 951-8808 FAX: (949) 951-3974

TITLE: EXTRUDED VERTICAL T-1¾ (5mm) LED NARROW PROFILE ASSY

DESIGNED:	DATE:	PART NO:	REVISION:
MInh Doan	07/26/12	ELM1XXX5XX	N
CHECKED: T. Yin	DATE: 07/26/12	CAGE CODE : 32559	SHEET # 1 OF 5

CAD GENERATED DOCUMENT, DO NOT MEASURE DRAWING.

REV.	DESCRIPTION	DATE	APPROVED
	SEE SHEET#1.		

LED Assy. No.	Chip			Lens Appearance	Electro-Optical Data @ 20mA				Viewing Angle 2 θ ½ (Deg)	LED P/N
	Material	Peak Wave Length	Emitted Color		If (mA)	Vf (V)		Iv (mcd)		
					MAX	TYP	MAX	TYP		
ELM1XXX5BWC	GaN/SiC	430	BLUE	WATER CLEAR	25	4	4.5	25	20	5BWC-F
ELM1XXX5BWD	GaN/SiC	430	BLUE	DIFFUSED	25	4	4.5	15	45	5BWD-F
ELM1XXX5BWT	GaN/SiC	430	BLUE	TINTED	25	4	4.5	30	20	5BWT-F
ELM1XXX5GC	GaP/GaP	568	GREEN	WATER CLEAR	30	2.1	2.8	40	35	5GC-F
ELM1XXX5GD	GaP/GaP	568	GREEN	DIFFUSED	30	2.1	2.8	25	45	5GD-F
ELM1XXX5GT	GaP/GaP	568	GREEN	TINTED	30	2.1	2.8	40	35	5GT-F
ELM1XXX5PGC	GaP/GaP	555	PURE GREEN	WATER CLEAR	30	2.2	2.8	10	35	5PGC-F
ELM1XXX5PGD	GaP/GaP	555	PURE GREEN	DIFFUSED	30	2.2	2.8	10	45	5PGD-F
ELM1XXX5PGT	GaP/GaP	555	PURE GREEN	TINTED	30	2.2	2.8	10	35	5PGT-F
ELM1XXX5YC	GaAsP/GaP	590	YELLOW	WATER CLEAR	30	2	2.8	40	35	5YC-F
ELM1XXX5YD	GaAsP/GaP	590	YELLOW	DIFFUSED	30	2	2.8	25	45	5YD-F
ELM1XXX5YT	GaAsP/GaP	590	YELLOW	TINTED	30	2	2.8	40	35	5YT-F
ELM1XXX5AC	GaAsP/GaP	605	AMBER	WATER CLEAR	30	2	2.8	40	35	5AC-F
ELM1XXX5AD	GaAsP/GaP	605	AMBER	DIFFUSED	30	2	2.8	25	45	5AD-F
ELM1XXX5AT	GaAsP/GaP	605	AMBER	TINTED	30	2	2.8	40	35	5AT-F
ELM1XXX5HC	GaAsP/GaP	625	HE RED	WATER CLEAR	30	2	2.8	40	35	5HC-F
ELM1XXX5HD	GaAsP/GaP	625	HE RED	DIFFUSED	30	2	2.8	25	45	5HD-F
ELM1XXX5HT	GaAsP/GaP	625	HE RED	TINTED	30	2	2.8	40	35	5HT-F
ELM1XXX5RC	GaP/GaP	700	RED	WATER CLEAR	20	2.1	2.8	2	35	5RC-F
ELM1XXX5RD	GaP/GaP	700	RED	DIFFUSED	20	2.1	2.8	2	45	5RD-F
ELM1XXX5RT	GaP/GaP	700	RED	TINTED	20	2.1	2.8	2	35	5RT
ELM1XXX5BC-A/G	GaAsP/GaP	605	AMBER	WHITE DIFFUSED	30	2.0	2.8	6	45	5BC-A/G-F
	GaP/GaP	568	GREEN		30	2.1	2.8	6		
ELM1XXX5BC	GaAsP/GaP	625	RED	WHITE DIFFUSED	30	2.0	2.8	6	45	5BC-F
	GaP/GaP	568	GREEN		30	2.1	2.8	8		
ELM1XXX5BC-R/Y	GaAsP/GaP	625	RED	WHITE DIFFUSED	30	2.0	2.8	6	45	5BC-R/Y-F
	GaAsP/GaP	590	YELLOW		30	2.0	2.8	5		
ELM1XXX5BC-Y/G	GaAsP/GaP	590	YELLOW	WHITE DIFFUSED	30	2.0	2.8	5	45	5BC-Y/G-F
	GaP/GaP	568	GREEN		30	2.1	2.8	8		

STANDARD TOLERANCE
(UNLESS OTHERWISE SPECIFIED)
±10% ALL VALUES ANGULAR
X° ± 5°

BIVAR®
4 THOMAS, IRVINE, CA. 92618
TEL: (949) 951-8808 FAX: (949) 951-3974

TITLE: EXTRUDED VERTICAL T-1¾ (5mm) LED NARROW PROFILE ASSY

DESIGNED: Minh Doan	DATE: 07/26/12	PART NO: ELM1XXX5XX	REVISION: N
CHECKED: T. Yln	DATE: 07/26/12	CAGE CODE : 32559	SHEET # 2 OF 5

CAD GENERATED DOCUMENT, DO NOT MEASURE DRAWING.

REV.	DESCRIPTION	DATE	APPROVED
	SEE SHEET#1.		

LED Assy. No.	Chip			Lens Appearance	Electro-Optical Data @ 20mA				Viewing Angle 2 θ ½ (Deg)	LED P/N
	Material	Peak Wave Length	Emitted Color		If (mA)	Vf (V)		Iv (mcd)		
					MAX	TYP	MAX	TYP		
EML1XXX5UBWC	InGaN/SiC	468	BLUE	WATER CLEAR	76	3.7	4.5	2500	15	5BWC2.515F
ELM1XXX5SGC	GaP/GaP	568	GREEN	WATER CLEAR	30	2.1	2.8	60	35	5SGC-F
ELM1XXX5SGD	GaP/GaP	568	GREEN	DIFFUSED	30	2.1	2.8	50	40	5SGD-F
ELM1XXX5SGT	GaP/GaP	568	GREEN	TINTED	30	2.1	2.8	60	35	5SGT-F
ELM1XXX5SYC	GaAsP/GaP	590	YELLOW	WATER CLEAR	30	2.0	2.8	600	35	5SYC-F
ELM1XXX5SYD	GaAsP/GaP	590	YELLOW	DIFFUSED	30	2.0	2.8	150	40	5SYD-F
ELM1XXX5SYT	GaAsP/GaP	590	YELLOW	TINTED	30	2.0	2.8	600	35	5SYT-F
ELM1XXX5SRC	GaAlAs/GaAs	645	SUPER RED	WATER CLEAR	30	1.7	2.4	60	35	5SRC-F
ELM1XXX5SRD	GaAlAs/GaAs	645	SUPER RED	DIFFUSED	30	1.7	2.4	40	40	5SRD-F
ELM1XXX5SRT	GaAlAs/GaAs	645	SUPER RED	TINTED	30	1.7	2.4	60	35	5SRT-F
ELM1XXX5UGC	AlGaInP	570	GREEN	WATER CLEAR	30	2.1	2.4	400	35	5UGC-F
ELM1XXX5SUGC	AlGaInP	570	GREEN	WATER CLEAR	30	2.1	2.4	300	35	5SUGC-F
ELM1XXX5UYC	AlGaInP	590	YELLOW	WATER CLEAR	30	2.0	2.4	1000	30	5UYC-F
ELM1XXX5SUYC	AlGaInP	590	YELLOW	WATER CLEAR	30	2.0	2.4	700	35	5SUYC-F
ELM1XXX5UUYC	AlGaInP	590	YELLOW	WATER CLEAR	30	2.0	2.4	500	35	5UUYC-F
ELM1XXX5UOC	AlGaInP	625	ORANGE	WATER CLEAR	30	1.8	2.4	1400	35	5UOC-F
ELM1XXX5UOC	AlGaInP	625	ORANGE	WATER CLEAR	30	1.8	2.4	1300	35	5SUOC-F
ELM1XXX5URC	GaAlAs/GaAs	645	RED	WATER CLEAR	30	1.7	2.4	400	30	5URC-F
ELM1XXX5SURC	AlGaInP	640	RED	WATER CLEAR	30	1.8	2.4	500	35	5SURC-F
ELM1XXX5UWC	InGaN/SiC	6500K	WHITE	WATER CLEAR	100	3.5	4.2	2700	30	5WC2.730F

STANDARD TOLERANCE
(UNLESS OTHERWISE SPECIFIED)
±10% ALL VALUES ANGULAR X° ± 5°

BIVAR®
4 THOMAS, IRVINE, CA. 92618
TEL: (949) 951-8808 FAX: (949) 951-3974

TITLE: EXTRUDED VERTICAL T-1¾ (5mm) LED NARROW PROFILE ASSY

DESIGNED: Minh Doan	DATE: 07/26/12	PART NO: ELM1XXX5XX	REVISION: N
CHECKED: T. Yln	DATE: 07/26/12	CAGE CODE : 32559	SHEET # 3 OF 5

CAD GENERATED DOCUMENT, DO NOT MEASURE DRAWING.

REV.	DESCRIPTION	DATE	APPROVED
	SEE SHEET#1.		

LED Assy. No.	Peak Wave Length λp(nm)	Emitted Color	Lens Appearance	Max. Rating If (mA)	Electro-Optical Data @ 2mA Vf (V)		Iv (mcd)	Viewing Angle 2 θ ½ (Deg)	LED P/N
				MAX	TYP	MAX	TYP		
ELM1XXX5BWDL	430	BLUE	DIFFUSED	7	3.8	4.2	4	40	5BWDL-F
ELM1XXX5PGDL	555	PURE GREEN	DIFFUSED	7	2.1	2.6	1	40	5PGDL-F
ELM1XXX5GDL	568	GREEN	DIFFUSED	7	2.1	2.6	4	40	5GDL-F
ELM1XXX5YDL	590	YELLOW	DIFFUSED	7	2.0	2.6	4	40	5YDL-F
ELM1XXX5ADL	605	AMBER	DIFFUSED	7	2.0	2.6	4	40	5ADL-F
ELM1XXX5HDL	625	HE RED	DIFFUSED	7	2.0	2.6	5	40	5HDL-F
ELM1XXX5SRDL	645	SUPER RED	DIFFUSED	7	1.7	2.3	6	40	5SRDL-F

Assembly P/N	Peak Wave Length λp(nm)	Emitted Color	Lens Appearance	Electro-Optical Data If (mA)	Vf (V)		Iv (mcd)	Viewing Angle 2 θ½ (Deg)	LED P/N
				MAX	TYP	MAX	TYP		
5 Volt				**Data @ 5V**					
ELM1XXX5BWD5V	BLUE	430	DIFFUSED	-	-	5	15	40	5BWD5V-F
ELM1XXX5GC5V	GREEN	568	WATER CLEAR	-	-	5	40	40	5GC5V-F
ELM1XXX5GD5V	GREEN	568	DIFFUSED	-	-	5	25	40	5GD5V-F
ELM1XXX5GT5V	GREEN	568	TINTED	-	-	5	40	40	5GT5V-F
ELM1XXX5AD5V	AMBER	605	DIFFUSED	-	-	5	25	40	5AD5V-F
ELM1XXX5HD5V	HE RED	625	DIFFUSED	-	-	5	30	40	5HD5V-F
ELM1XXX5RD5V	RED	700	DIFFUSED	-	-	5	1.5	40	5RD5V-F
ELM1XXX5YD5V	YELLOW	590	DIFFUSED	-	-	5	25	40	5YD5V-F
12 Volt				**Data @ 12V**					
ELM1XXX5GC12V	GREEN	568	WATER CLEAR	-	-	12	40	35	5GC12V-F
ELM1XXX5GD12V	GREEN	568	DIFFUSED	-	-	12	25	40	5GD12V-F
ELM1XXX5HC12V	HE RED	625	WATER CLEAR	-	-	12	50	35	5HC12V-F
ELM1XXX5HD12V	HE RED	625	DIFFUSED	-	-	12	30	40	5HD12V-F
ELM1XXX5RC12V	RED	700	WATER CLEAR	-	-	12	2	35	5RC12V-F
ELM1XXX5RD12V	RED	700	DIFFUSED	-	-	12	1.5	40	5RD12V-F
ELM1XXX5YC12V	YELLOW	590	WATER CLEAR	-	-	12	25	35	5YC12V-F
ELM1XXX5YD12V	YELLOW	590	DIFFUSED	-	-	12	20	40	5YD12V-F

STANDARD TOLERANCE
(UNLESS OTHERWISE SPECIFIED)
±10% ALL VALUES ANGULAR X° ± 5°

BIVAR®
4 THOMAS, IRVINE, CA. 92618
TEL: (949) 951-8808 FAX: (949) 951-3974

TITLE: EXTRUDED VERTICAL T-1¾ (5mm) LED NARROW PROFILE ASSY

DESIGNED: Minh Doan	DATE: 07/26/12	PART NO: ELM1XXX5XX	REVISION: N
CHECKED: T. Yin	DATE: 07/26/12	CAGE CODE : 32559	SHEET # 4 OF 5

CAD GENERATED DOCUMENT, DO NOT MEASURE DRAWING.

REV.	DESCRIPTION	DATE	APPROVED
	SEE SHEET #1		

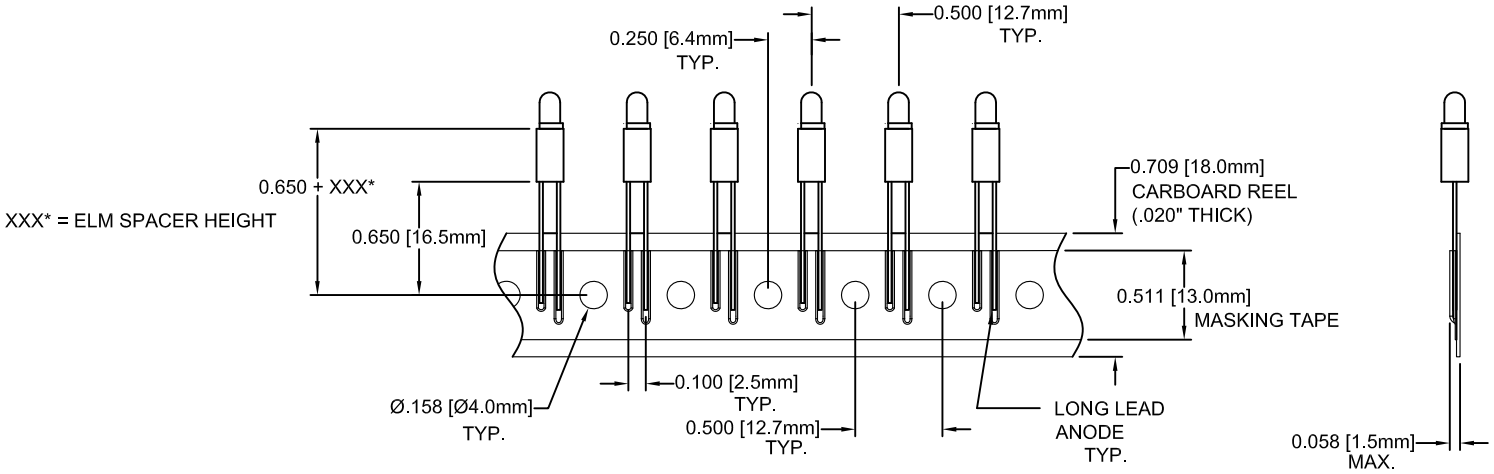

DIRECTION OF FEED →

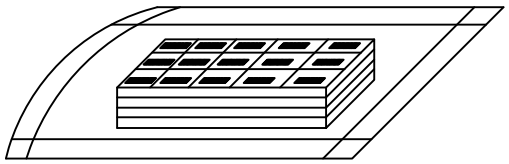

STANDARD PACKAGING TRAY

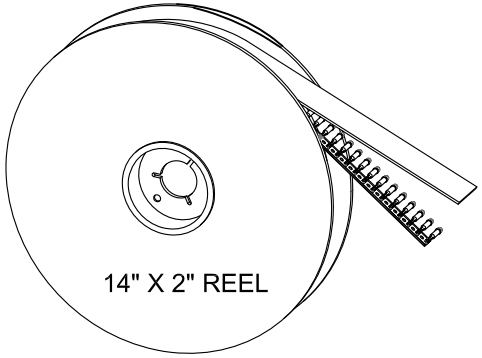

TAPE & REEL
1,000 pcs / reel

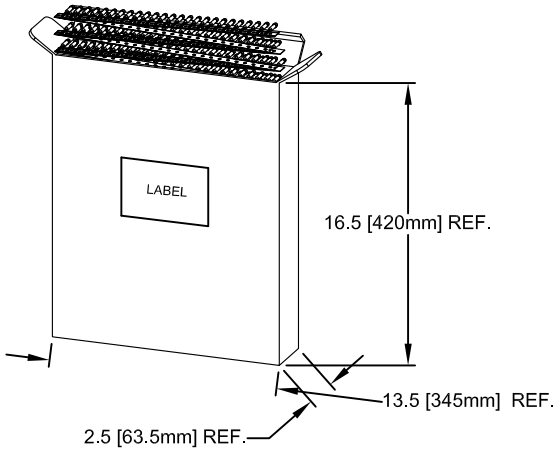

AMMO PACK
2,000 pcs / box

NOTE:
1. STANDARD PART NUMBERS ARE PACKAGED IN LOOSE PIECES USING PACKAGING TRAYS
2. ADD "T" SUFFIX TO PART NUMBER FOR TAPE AND REEL PACKAGING OPTION (1,000 PCS/REEL)
3. ADD "A" SUFFIX TO PART NUMBER FOR AMMO PACK OPTION (2,000 PCS/BOX)
4. TAPE AND REEL PACKAGING COMPLY TO EIA-468-C

STANDARD TOLERANCE
(UNLESS OTHERWISE SPECIFIED)

DECIMALS		ANGULAR	
.X	± .1	X°	± 1°
.XX	± .02		
.XXX	± .010		

BIVAR®
4 THOMAS, IRVINE, CA. 92618
TEL: (949) 951-8808 FAX: (949) 951-3974

TITLE: EXTRUDED VERTICAL T-1 3/4 (5mm) LED NARROW PROFILE ASSY

DESIGNED:	DATE:	PART NO:	REVISION:
Ty Yin	03/10/04	ELM1XXX5XX	N
CHECKED: Davld Green	DATE: 03/10/04	CAGE CODE : 32559	SHEET # 5 OF 5

CAD GENERATED DOCUMENT, DO NOT MEASURE DRAWING.

Компания «ЭлектроПласт» предлагает заключение долгосрочных отношений при поставках импортных электронных компонентов на взаимовыгодных условиях!

Наши преимущества:

- Оперативные поставки широкого спектра электронных компонентов отечественного и импортного производства напрямую от производителей и с крупнейших мировых складов;
- Поставка более 17-ти миллионов наименований электронных компонентов;
- Поставка сложных, дефицитных, либо снятых с производства позиций;
- Оперативные сроки поставки под заказ (от 5 рабочих дней);
- Экспресс доставка в любую точку России;
- Техническая поддержка проекта, помощь в подборе аналогов, поставка прототипов;
- Система менеджмента качества сертифицирована по Международному стандарту ISO 9001;
- Лицензия ФСБ на осуществление работ с использованием сведений, составляющих государственную тайну;
- Поставка специализированных компонентов (Xilinx, Altera, Analog Devices, Intersil, Interpoint, Microsemi, Aeroflex, Peregrine, Syfer, Eurofarad, Texas Instrument, Miteq, Cobham, E2V, MA-COM, Hittite, Mini-Circuits,General Dynamics и др.);

Помимо этого, одним из направлений компании «ЭлектроПласт» является направление «Источники питания». Мы предлагаем Вам помощь Конструкторского отдела:

- Подбор оптимального решения, техническое обоснование при выборе компонента;
- Подбор аналогов;
- Консультации по применению компонента;
- Поставка образцов и прототипов;
- Техническая поддержка проекта;
- Защита от снятия компонента с производства.

Как с нами связаться

Телефон: 8 (812) 309 58 32 (многоканальный)
Факс: 8 (812) 320-02-42
Электронная почта: org@eplast1.ru
Адрес: 198099, г. Санкт-Петербург, ул. Калинина, дом 2, корпус 4, литера А.