45W Reliable Green Medical Power Supply

RPS-45 series

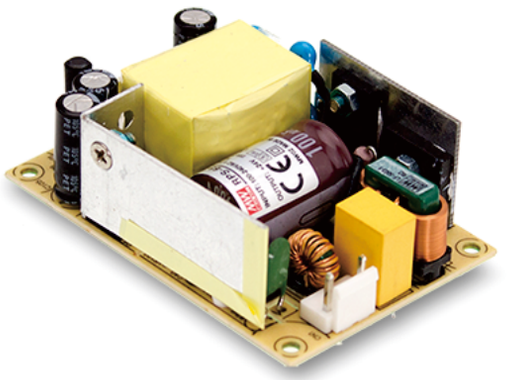

ANSI/AAMI ES60601-1 EN60601-1 IEC60601-1

ECO Medical 2xMOPP BF rated

Features

- 3"×2" compact size
- Medical safety approved (2 x MOPP) according to ANSI/AAMI ES60601-1 and IEC/EN60601-1
- Suitable for BF application with appropriate system consideration
- Cooling by free air convection
- EMI class B for class Ⅱ configuration
- No load power consumption<0.1W
- Extremely low leakage current
- Protections: Short circuit / Overload / Over voltage
- Lifetime > 50K hours
- Operating altitude up to 4000 meters
- 3 years warranty

Applications

- Oral irrigator
- Hemodialysis machine
- Medical computer monitors
- Sleep apnea devices

Description

RPS-45 is a 45W highly reliable green PCB type medical power supply with a high power density on the 3" by 2" footprint. It accepts 80~264VAC input and offers various output voltages between 3.3V and 48V. The working efficiency is up to 91% and the extremely low no load power consumption is down below 0.1W. RPS-45 is able to be used for Class Ⅱ (no FG) system design. The extremely low leakage current is less than 100μA. In addition, it conforms to international medical regulations (2*MOPP) and EMC EN55011, perfectly fitting all kinds of BF rated "patient contact" medical system equipment.

Model Encoding

RPS- 45 - 3.3

- 3.3 — Output voltage
- 45 — Rated wattage
- RPS — Series name

SPECIFICATION

ORDER NO.		RPS-45-3.3	RPS-45-5	RPS-45-7.5	RPS-45-12	RPS-45-15	RPS-45-24	RPS-45-48
OUTPUT	DC VOLTAGE	3.3V	5V	7.5V	12V	15V	24V	48V
	RATED CURRENT	8A	8A	5.4A	3.8A	3A	1.9A	0.94A
	CURRENT RANGE	0 ~ 8.8A	0 ~ 8.8A	0 ~ 5.95A	0 ~ 4.18A	0 ~ 3.3A	0 ~ 2.1A	0 ~ 1.03A
	RATED POWER	26.4W	40W	40.5W	45.6W	45W	45.6W	45.1W
	PEAK LOAD(10sec.) Note.2	29W	44W	44.6W	50.2W	49.5W	50.2W	49.4W
	RIPPLE & NOISE (max.) Note.3	60mVp-p	60mVp-p	80mVp-p	100mVp-p	100mVp-p	120mVp-p	120mVp-p
	VOLTAGE ADJ.RANGE	3.1~3.6V	4.7~5.5V	7.12~8.3V	11.4~13.2V	13.5~16.5V	22.8~27.6V	45.6~52.8V
	VOLTAGE TOLERANCE Note.4	±2.0%	±2.0%	±2.0%	±2.0%	±1.0%	±1.0%	±1.0%
	LINE REGULATION	±0.5%	±0.5%	±0.5%	±0.5%	±0.5%	±0.5%	±0.5%
	LOAD REGULATION	±2.0%	±2.0%	±2.0%	±2.0%	±1.0%	±1.0%	±1.0%
	SETUP, RISE TIME	500ms, 30ms / 230VAC 500ms, 30ms / 115VAC at full load						
	HOLD UP TIME (Typ.)	30ms / 230VAC 16ms / 115VAC at full load						
INPUT	VOLTAGE RANGE Note.5	80 ~ 264VAC						
	FREQUENCY RANGE	47 ~ 63Hz						
	EFFICIENCY (Typ.)	80.5%	83%	85%	88%	89%	90%	91%
	AC CURRENT (Typ.)	1.2A / 115VAC 1A / 230VAC						
	INRUSH CURRENT (Typ.)	COLD STAR 30A/115VAC 60A/230VAC						
	LEAKAGE CURRENT(max.) Note.6	Touch current< 100μA/264VAC						
PROTECTION	OVERLOAD	115 ~ 150% rated output power						
		Protection type : Hiccup mode, recovers automatically after fault condition is removed						
	OVER VOLTAGE	3.8~5V	5.7~6.8V	8.6~11.3V	13.8~16.2V	17.2~20.3V	28.4~32.4V	55.2~64.8V
		Protection type : Shut down o/p voltage, re-power on to recover						
ENVIRONMENT	WORKING TEMP.	-30 ~ +70℃ (Refer to "Derating Curve")						
	WORKING HUMIDITY	20% ~ 90% RH non-condensing						
	STORAGE TEMP., HUMIDITY	-40 ~ +85℃, 10 ~ 95% RH non-condensing						
	TEMP. COEFFICIENT	±0.03% / ℃ (0 ~ 50℃)						
	VIBRATION	10 ~ 500Hz, 2G 10min./1cycle, period for 60min. each along X, Y, Z axes						
	OPERATING ALTITUDE Note.7	4000 meters						
SAFETY & EMC (Note. 8)	SAFETY STANDARDS	IEC60601-1, TUV EN60601-1, EAC TP TC 004,UL ANSI / AAMI ES60601-1 (3.1 version), CAN/CSA-C22.2 No. 60601-1:14 - Edition 3 approved;Design refer to EN60335-1						
	ISOLATION LEVEL	Primary-Secondary: 2xMOPP						
	WITHSTAND VOLTAGE	I/P-O/P: 4KVAC						
	ISOLATION RESISTANCE	I/P-O/P:100M Ohms / 500VDC / 25℃/ 70% RH						
	EMC EMISSION	Parameter	Standard	Test Level / Note				
		Conducted emission	EN55011 (CISPR11)	Class B				
		Radiated emission	EN55011 (CISPR11)	Class B				
		Harmonic current	EN61000-3-2	Class A				
		Voltage flicker	EN61000-3-3	-----				
	EMC IMMUNITY	EN60601-1-2						
		Parameter	Standard	Test Level / Note				
		ESD	EN61000-4-2	Level 4, 15KV air ; Level 4, 8KV contact				
		RF field susceptibility	EN61000-4-3	Level 3, 10V/m(80MHz~2.7GHz) Table 9, 9~28V/m(385MHz~5.78GHz)				
		EFT bursts	EN61000-4-4	Level 3, 2KV				
		Surge susceptibility	EN61000-4-5	Level 4, 2KV/Line-Line				
		Conducted susceptibility	EN61000-4-6	Level 3, 10V				
		Magnetic field immunity	EN61000-4-8	Level 4, 30A/m				
		Voltage dip, interruption	EN61000-4-11	100% dip 1 periods, 30% dip 25 periods, 100% interruptions 250 periods				
OTHERS	MTBF	726.2Khrs min. MIL-HDBK-217(25℃)						
	DIMENSION (L*W*H)	76.2*50.8*24mm or 3" * 2" *0.945" inch						
	PACKING	0.11Kg; 120pcs/14.2Kg/0.97CUFT						

NOTE

1. All parameters NOT specially mentioned are measured at 230VAC input, rated load and 25℃ of ambient temperature.
2. 33% Duty cycle maximum within every 30 seconds. Average output power should not exceed the rated power.
3. Ripple & noise are measured at 20MHz of bandwidth by using a 12" twisted pair-wire terminated with a 0.1μf & 47μf parallel capacitor.
4. Tolerance : includes set up tolerance, line regulation and load regulation.
5. Derating may be needed under low input voltages. Please check the derating curve for more details.
6. Touch current was measured from primary input to DC output.
7. The ambient temperature derating of 3.5℃/1000m with fanless models and of 5℃/1000m with fan models for operating altitude higher than 2000m(6500ft).
8. The power supply is considered a component which will be installed into a final equipment. "All the EMC tests are been executed by mounting the unit on a 360mm*360mm metal plate with 1mm of thickness." The final equipment must be re-confirmed that it still meets EMC directives. For guidance on how to perform these EMC tests, please refer to "EMI testing of component power supplies." (as available on http://www.meanwell.com)

■ Block Diagram

fosc : 65KHz

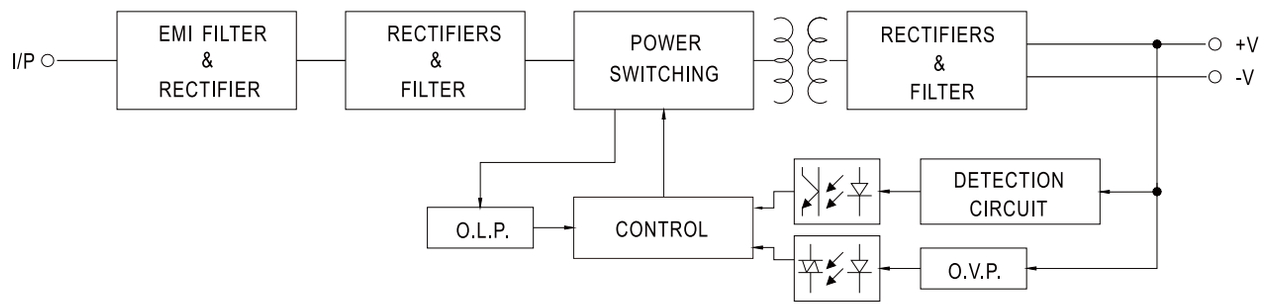

■ Derating Curve

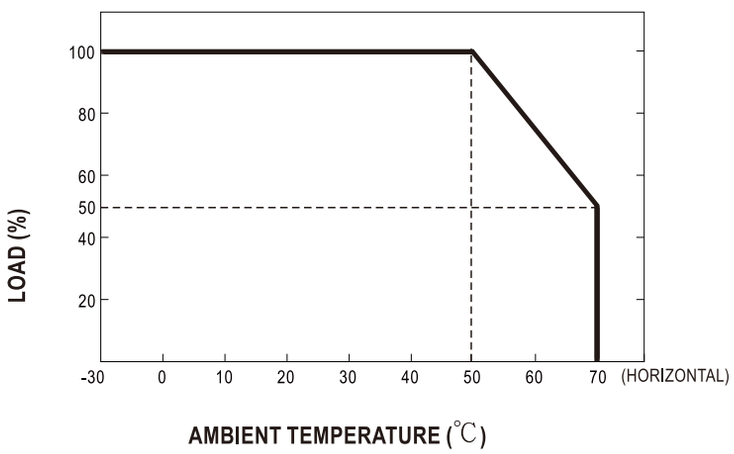

■ Static Characteristics

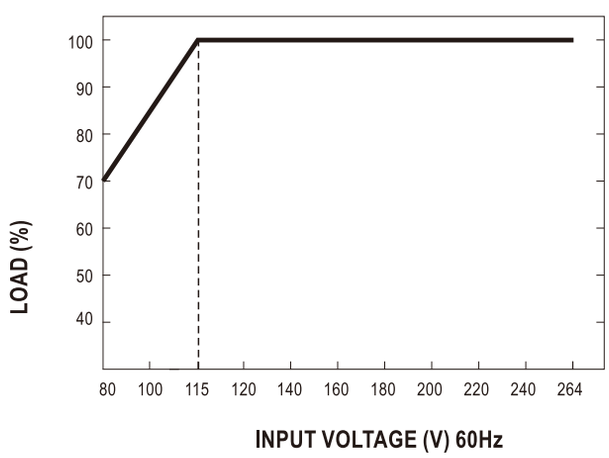

■ Mechanical Specification

Case No. Unit:mm

Top View

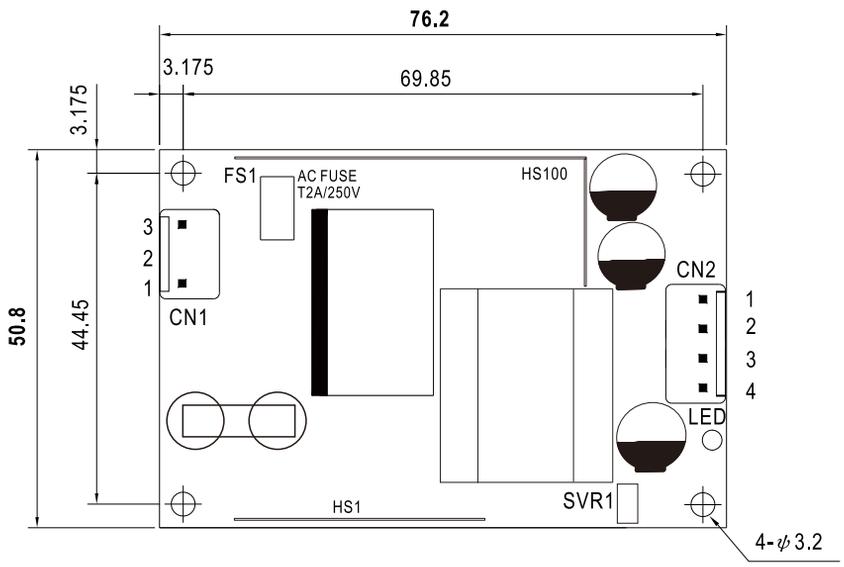

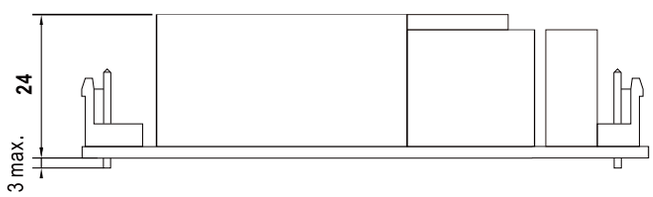

Side View

AC Input Connector (CN1) : JST B3P-VH or equivalent

Pin No.	Assignment	Mating Housing	Terminal
1	AC/N	JST VHR or equivalent	JST SVH-21T-P1.1 or equivalent
2	No Pin		
3	AC/L		

DC Output Connector (CN2) : JST B4P-VH or equivalent

Pin No.	Assignment	Mating Housing	Terminal
1	+V	JST VHR or equivalent	JST SVH-21T-P1.1 or equivalent
2	+V		
3	-V		
4	-V		

■ Installation Manual

Please refer to : http://www.meanwell.com/manual.html

Компания «ЭлектроПласт» предлагает заключение долгосрочных отношений при поставках импортных электронных компонентов на взаимовыгодных условиях!

Наши преимущества:

- Оперативные поставки широкого спектра электронных компонентов отечественного и импортного производства напрямую от производителей и с крупнейших мировых складов;
- Поставка более 17-ти миллионов наименований электронных компонентов;
- Поставка сложных, дефицитных, либо снятых с производства позиций;
- Оперативные сроки поставки под заказ (от 5 рабочих дней);
- Экспресс доставка в любую точку России;
- Техническая поддержка проекта, помощь в подборе аналогов, поставка прототипов;
- Система менеджмента качества сертифицирована по Международному стандарту ISO 9001;
- Лицензия ФСБ на осуществление работ с использованием сведений, составляющих государственную тайну;
- Поставка специализированных компонентов (Xilinx, Altera, Analog Devices, Intersil, Interpoint, Microsemi, Aeroflex, Peregrine, Syfer, Eurofarad, Texas Instrument, Miteq, Cobham, E2V, MA-COM, Hittite, Mini-Circuits,General Dynamics и др.);

Помимо этого, одним из направлений компании «ЭлектроПласт» является направление «Источники питания». Мы предлагаем Вам помощь Конструкторского отдела:

- Подбор оптимального решения, техническое обоснование при выборе компонента;
- Подбор аналогов;
- Консультации по применению компонента;
- Поставка образцов и прототипов;
- Техническая поддержка проекта;
- Защита от снятия компонента с производства.

Как с нами связаться

Телефон: 8 (812) 309 58 32 (многоканальный)
Факс: 8 (812) 320-02-42
Электронная почта: org@eplast1.ru
Адрес: 198099, г. Санкт-Петербург, ул. Калинина, дом 2, корпус 4, литера А.