Wideband 2.5 GHz, 37 dB Isolation at 1 GHz, CMOS 1.65 V to 2.75 V, 4:1 Mux/SP4T

Data Sheet

ADG904/ADG904-R

FEATURES

Wideband switch: –3 dB @ 2.5 GHz
ADG904: absorptive 4:1 mux/SP4T
ADG904-R: reflective 4:1 mux/SP4T
High off isolation (37 dB @ 1 GHz)
Low insertion loss (1.1 dB dc to 1 GHz)
Single 1.65 V to 2.75 V power supply
CMOS/LVTTL control logic
20-lead TSSOP and 4 mm × 4 mm LFCSP packages
Low power consumption (1 µA maximum)
Qualified for automotive applications

APPLICATIONS

Wireless communications
General-purpose RF switching
Dual-band applications
High speed filter selection
Digital transceiver front end switch
IF switching
Tuner modules
Antenna diversity switching

GENERAL DESCRIPTION

The ADG904 and ADG904-R are wideband analog 4:1 multiplexers that use a CMOS process to provide high isolation and low insertion loss to 1 GHz. The ADG904 is an absorptive/matched mux with 50 Ω terminated shunt legs; the ADG904-R is a reflective mux. These devices are designed such that the isolation is high over the dc to 1 GHz frequency range.

The ADG904 and ADG904-R switch one of four inputs to a common output, RFC, as determined by the 3-bit binary address lines A0, A1, and $\overline{EN}$. A Logic 1 on the $\overline{EN}$ pin disables the device.

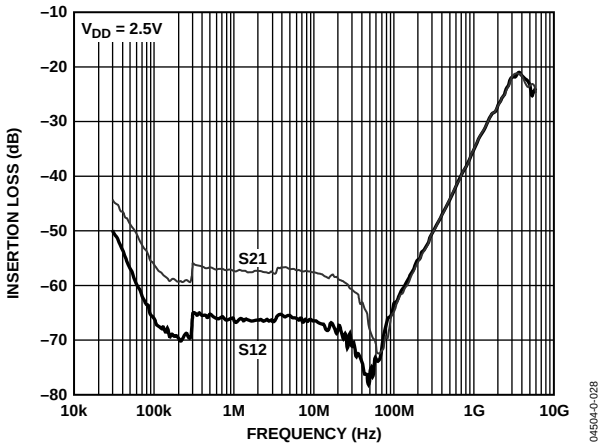

Figure 3. Off Isolation vs. Frequency

FUNCTIONAL BLOCK DIAGRAMS

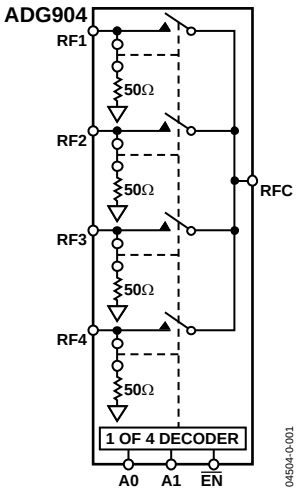

Figure 1.

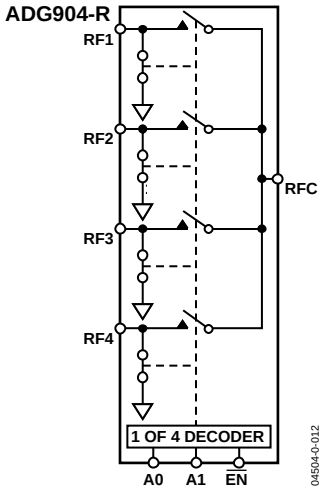

Figure 2.

The parts have on-board CMOS control logic, which eliminates the need for external control circuitry. The control inputs are both CMOS and LVTTL compatible. The low power consumption of these devices makes them ideally suited for wireless applications and general-purpose high frequency switching.

PRODUCT HIGHLIGHTS

1. –37 dB off isolation @ 1 GHz
2. 1.1 dB insertion loss @ 1 GHz
3. 20-lead TSSOP/LFCSP packages

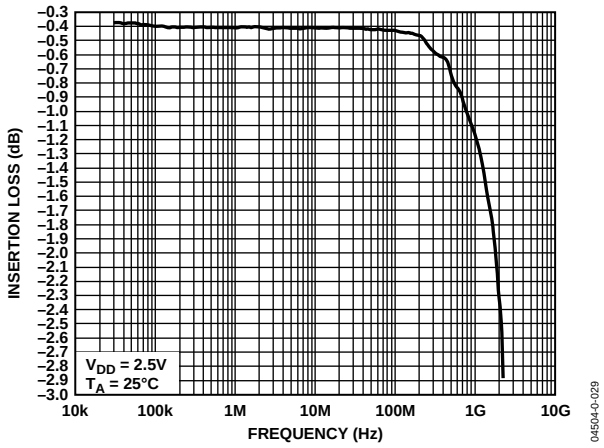

Figure 4. Insertion Loss vs. Frequency

Rev. C **Document Feedback**

Information furnished by Analog Devices is believed to be accurate and reliable. However, no responsibility is assumed by Analog Devices for its use, nor for any infringements of patents or other rights of third parties that may result from its use. Specifications subject to change without notice. No license is granted by implication or otherwise under any patent or patent rights of Analog Devices. Trademarks and registered trademarks are the property of their respective owners.

One Technology Way, P.O. Box 9106, Norwood, MA 02062-9106, U.S.A.
Tel: 781.329.4700 **©2004–2013 Analog Devices, Inc. All rights reserved.**
Technical Support **www.analog.com**

TABLE OF CONTENTS

Specifications ... 3
Absolute Maximum Ratings ... 4
ESD Caution ... 4
Pin Configurations and Function Descriptions ... 5
Terminology ... 6
Typical Performance Characteristics ... 7
Test Circuits ... 9
Applications ... 11
Absorptive vs. Reflective ... 11
Antenna Diversity Switch ... 11
Filter Selection ... 11
Tx/Rx Switching ... 11
Evaluation Board ... 12
Outline Dimensions ... 13
Ordering Guide ... 14
Automotive Products ... 14

REVISION HISTORY

1/13—Rev. B to Rev. C
Changes to Features Section ... 1
Changes to Figure 6 ... 5
Updated Outline Dimensions ... 13
Changes to Ordering Guide ... 14
Added Automotive Product Section ... 14

2/07—Rev. A to Rev. B
Updated Outline Dimensions ... 13
Changes to Ordering Guide ... 14

8/05—Rev. 0 to Rev. A
Added LFCSP Package ... Universal
Changes to Specifications ... 3
Changes to Absolute Maximum Ratings ... 4
Inserted New Figure 6 ... 5
Changes to Table 4 ... 5
Changes to Outline Dimensions ... 13
Changes to Ordering Guide ... 14

4/04—Revision 0: Initial Version

SPECIFICATIONS

VDD = 1.65 V to 2.75 V, GND = 0 V, Input Power = 0 dBm, all specifications T_{MIN} to T_{MAX}, unless otherwise noted.[1]

Table 1.

Parameter	Symbol	Conditions	B Version Min	Typ[2]	Max	Unit
AC ELECTRICAL CHARACTERISTICS						
Operating Frequency[3]			DC		2	GHz
3 dB Frequency[4]					2.5	GHz
Input Power[4]		0 V dc bias			7	dBm
		0.5 V dc bias			16	dBm
Insertion Loss	S_{21}, S_{12}	DC to 100 MHz; V_{DD} = 2.5 V ± 10%		0.4	0.8	dB
		500 MHz; V_{DD} = 2.5 V ± 10%		0.6	0.9	dB
		1000 MHz; V_{DD} = 2.5 V ± 10%		1.1	1.5	dB
Isolation—RFC to RF1–RF4	S_{21}, S_{12}	100 MHz	51	60		dB
		500 MHz	35	45		dB
		1000 MHz	30	37		dB
Crosstalk	S_{21}, S_{12}	100 MHz	50	58		dB
		500 MHz	35	32		dB
		1000 MHz	30	35		dB
Return Loss (On Channel)[4]	S_{11}, S_{22}	DC to 100 MHz	21	27		dB
		500 MHz	18	26		dB
		1000 MHz	15	30		dB
Return Loss (Off Channel)[4]	S_{11}, S_{22}	DC to 100 MHz	18	22		dB
		500 MHz	16	23		dB
		1000 MHz	18	22		dB
On Switching Time[4]	$t_{ON(\overline{EN})}$	50% $\overline{EN}$ to 90% RF		8.5	10	ns
Off Switching Time[4]	$t_{OFF(\overline{EN})}$	50% $\overline{EN}$ to 10% RF		13	16	ns
Transition Time	t_{TRANS}	50% Ax to 10% RF		12	15	ns
Rise Time[4]	t_{RISE}	10% to 90% RF		3	5	ns
Fall Time[4]	t_{FALL}	90% to 10% RF		7.5	9	ns
1 dB Compression[4]	$P_{-1\ dB}$	1000 MHz		16		dBm
Third-Order Intermodulation Intercept	IP_3	900 MHz/901 MHz, 4 dBm	26.5	31		dBm
Video Feedthrough[5]				3		mV p-p
DC ELECTRICAL CHARACTERISTICS						
Input High Voltage	V_{INH}	V_{DD} = 2.25 V to 2.75 V	1.7			V
	V_{INH}	V_{DD} = 1.65 V to 1.95 V	0.65 V_{CC}			V
Input Low Voltage	V_{INL}	V_{DD} = 2.25 V to 2.75 V			0.7	V
	V_{INL}	V_{DD} = 1.65 V to 1.95 V			0.35 V_{CC}	V
Input Leakage Current	I_I	$0 \le V_{IN} \le 2.75$ V		± 0.1	± 1	µA
CAPACITANCE[4]						
RF Port On Capacitance	C_{RF} ON	f = 1 MHz		3		pF
Digital Input Capacitance	C	f = 1 MHz		2		pF
POWER REQUIREMENTS						
V_{DD}			1.65		2.75	V
Quiescent Power Supply Current	I_{DD}	Digital inputs = 0 V or V_{DD}		0.1	1	µA

[1] Temperature range B version: −40°C to +85°C.
[2] Typical values are at V_{DD} = 2.5 V and 25°C, unless otherwise stated.
[3] Operating frequency is the point at which insertion loss degrades by 1.5 dB.
[4] Guaranteed by design, not subject to production test.
[5] Video feedthrough is the dc transience at the output of any port of the switch when the control voltage is switched from high to low or low to high in a 50 Ω test setup, measured with 1 ns rise time pulses and 500 MHz bandwidth.

ABSOLUTE MAXIMUM RATINGS

T_A = 25°C, unless otherwise noted.

Table 2.

Parameter	Rating
V_{DD} to GND	−0.5 V to +4 V
Inputs to GND	−0.5 V to V_{DD} + 0.3 V[1]
Continuous Current	30 mA
Input Power	18 dBm
Operating Temperature Range	
Industrial (B Version)	−40°C to +85°C
Storage Temperature Range	−65°C to +150°C
Junction Temperature	150°C
TSSOP Package	
θ_{JA} Thermal Impedance	143°C/W
LFCSP Package	
θ_{JA} Thermal Impedance (4-Layer Board)	30.4°C/W
Lead Temperature, Soldering (10 sec)	300°C
IR Reflow, Peak Temperature (<20 sec)	235°C
ESD	1 kV

[1] RFx off port inputs to ground = −0.5 V to V_{DD} − 0.5 V.

Stresses above those listed under Absolute Maximum Ratings may cause permanent damage to the device. This is a stress rating only; functional operation of the device at these or any other conditions above those indicated in the operational section of this specification is not implied. Exposure to absolute maximum rating conditions for extended periods may affect device reliability. Only one absolute maximum rating may be applied at any one time.

Table 3. Truth Table

A1	A0	$\overline{EN}$	ON Switch[1]
X	X	1	None
0	0	0	RF1
0	1	0	RF2
1	0	0	RF3
1	1	0	RF4

[1] Off switches have: 50 Ω termination to GND (ADG904); shunt to GND (ADG904-R).

ESD CAUTION

ESD (electrostatic discharge) sensitive device. Electrostatic charges as high as 4000 V readily accumulate on the human body and test equipment and can discharge without detection. Although this product features proprietary ESD protection circuitry, permanent damage may occur on devices subjected to high energy electrostatic discharges. Therefore, proper ESD precautions are recommended to avoid performance degradation or loss of functionality.

PIN CONFIGURATIONS AND FUNCTION DESCRIPTIONS

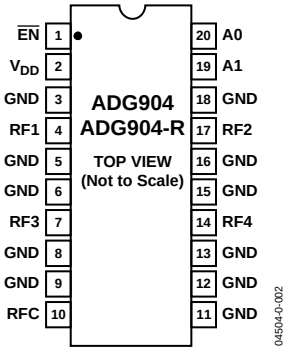

Figure 5. 20-Lead TSSOP (RU-20)

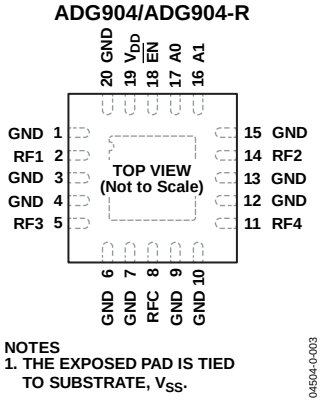

Figure 6. 20-Lead 4 mm × 4mm LFCSP (CP-20-6)

Table 4. Pin Function Descriptions

Pin No.			
20-Lead TSSOP	**20-Lead LFCSP**	**Mnemonic**	**Function**
1	18	$\overline{EN}$	Active Low Digital Input. When high, the device is disabled and all switches are off. When low, Ax logic inputs determine On switches.
2	19	V_{DD}	Power Supply Input. These parts can be operated from 1.65 V to 2.75 V. V_{DD} should be decoupled to GND.
3, 5, 6, 8, 9, 11, 12, 13, 15, 16, 18	1, 3, 4, 6, 7, 9, 10, 12, 13, 15, 20	GND	Ground Reference Point for All Circuitry on the Part.
4	2	RF1	RF1 Port.
7	5	RF3	RF3 Port.
10	8	RFC	Common RF Port for Switch.
14	11	RF4	RF4 Port.
17	14	RF2	RF2 Port.
19	16	A1	Logic Control Input.
20	17	A0	Logic Control Input.
N/A	21	EPAD	Exposed Pad. The exposed pad is tied to substrate, V_{SS}.

TERMINOLOGY

Table 5.

Parameter	Description
V_{DD}	Most Positive Power Supply Potential.
I_{DD}	Positive Supply Current.
GND	Ground (0 V) Reference.
Ax	Logic Control Input.
V_{INL}	Maximum Input Voltage for Logic 0.
V_{INH}	Minimum Input Voltage for Logic 1.
I_{INL} (I_{INH})	Input Current of the Digital Input.
C_{IN}	Digital Input Capacitance.
$t_{ON (\overline{EN})}$	Delay between Applying the $\overline{EN}$ Control Input and the Output Switching On.
$t_{OFF (\overline{EN})}$	Delay between Applying the $\overline{EN}$ Control Input and the Output Switching Off.
t_{RISE}	Rise Time. Time for the RF signal to rise from 10% of the on level to 90% of the on level.
t_{FALL}	Fall Time. Time for the RF signal to fall from 90% of the on level to 10% of the on level.
t_{TRANS}	Transition Time. Delay between applying the digital control input and the output switching on.
Off Isolation	The Attenuation between Input and Output Ports of the Switch when the Switch Control Voltage is in the Off Condition.
Insertion Loss	The Attenuation between Input and Output Ports of the Switch when the Switch Control Voltage is in the On Condition.
Crosstalk	Measure of Unwanted Signal Coupled through from One Channel to Another as a Result of Parasitic Capacitance.
$P_{-1\ dB}$	1 dB Compression Point. The RF input power level at which the switch insertion loss increases by 1 dB over its low level value. $P_{-1\ dB}$ is a measure of how much power the on switch can handle before the insertion loss increases by 1 dB.
IP_3	Third-Order Intermodulation Intercept. This is a measure of the power in false tones that occur when closely spaced tones are passed through a switch, and the nonlinearity of the switch causes these false tones to be generated.
Return Loss	The Amount of Reflected Power Relative to the Incident Power at a Port. Large return loss indicates good matching. By measuring return loss, the voltage standing wave ratio (VSWR) can be calculated from conversion charts. VSWR indicates the degree of matching present at a switch RF port.
Video Feedthrough	Spurious Signals Present at the RF Ports of the Switch when the Control Voltage Is Switched from High to Low or Low to High without an RF Signal Present.

TYPICAL PERFORMANCE CHARACTERISTICS

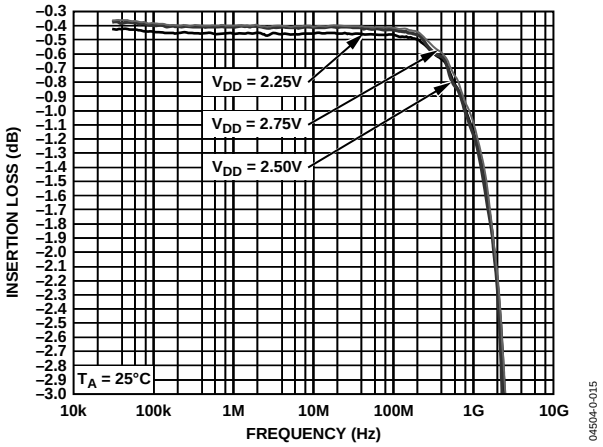

Figure 7. Insertion Loss vs. Frequency over Supplies (RF1–RF4, S12, and S21)

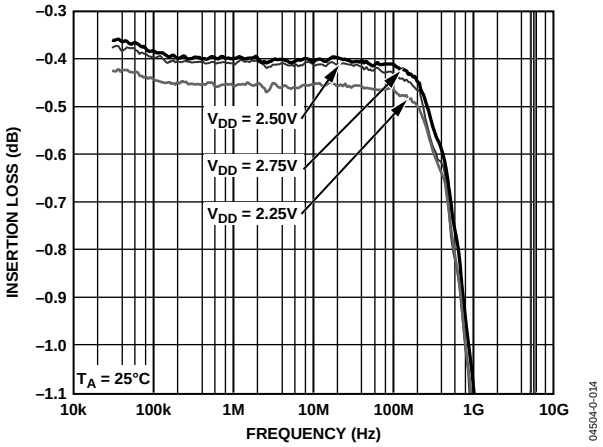

Figure 8. Insertion Loss vs. Frequency over Supplies (RF1–RF4, S12, and S21). Zoomed Figure 7 Plot

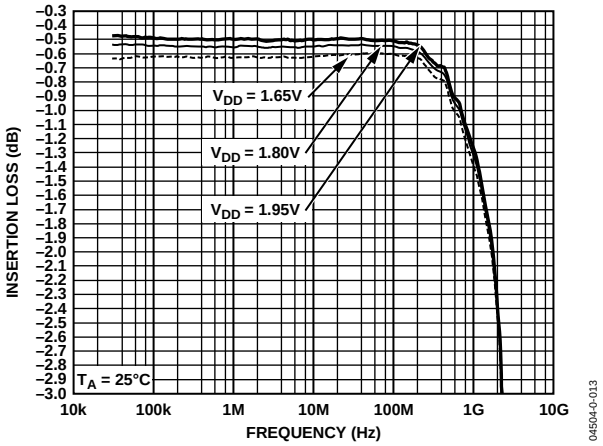

Figure 9. Insertion Loss vs. Frequency over Supplies (RF1–RF4, S12, and S21)

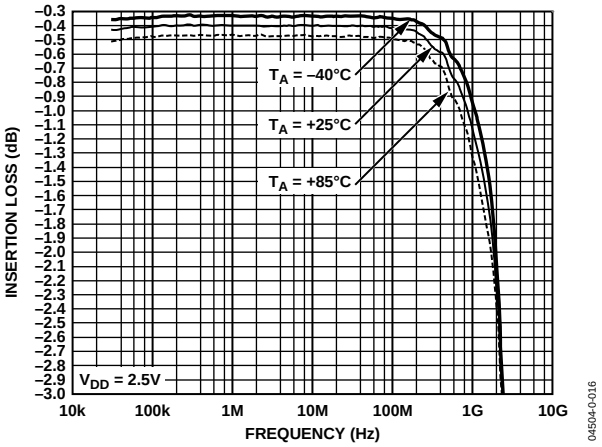

Figure 10. Insertion Loss vs. Frequency over Temperature ((RF1–RF4, S12, and S21)

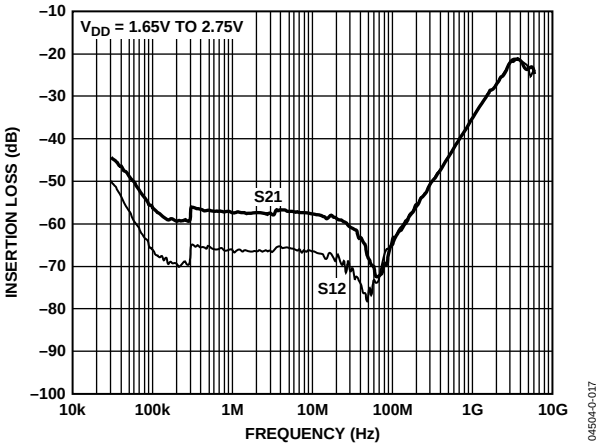

Figure 11. Isolation vs. Frequency over Supplies (RF1–RF4, S12, and S21)

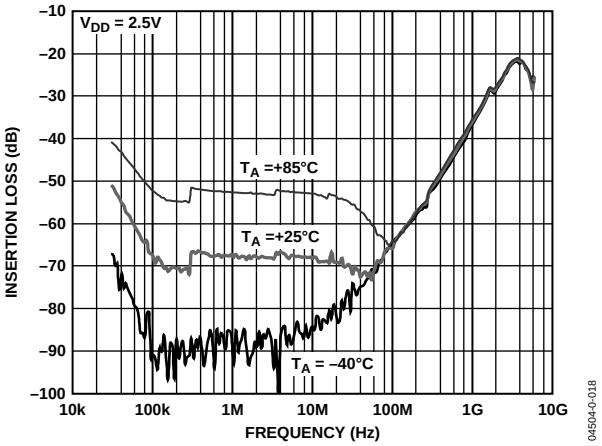

Figure 12. Isolation vs. Frequency over Temperature (RF1–RF4, S12, and S21)

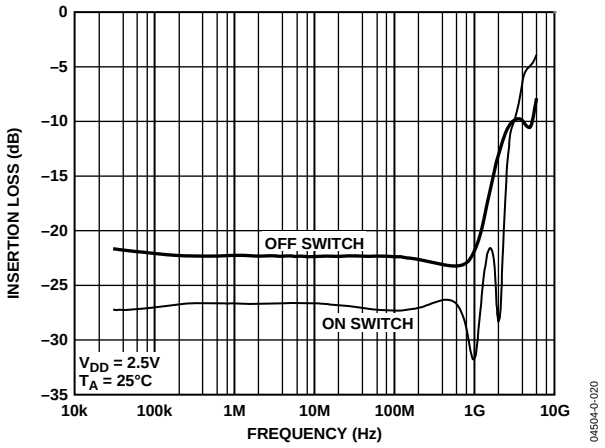

Figure 13. Return Loss vs. Frequency (RF1–RF4, S11)

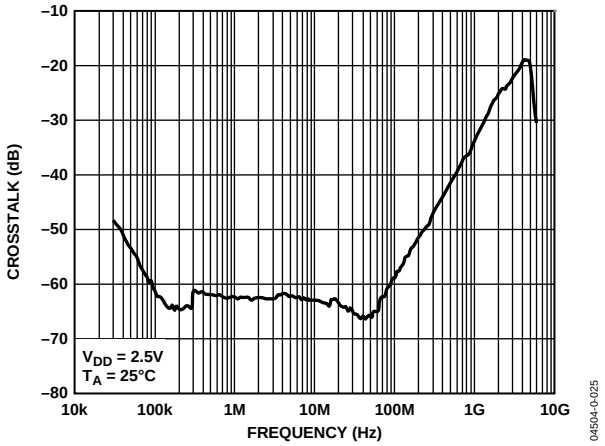

Figure 14. Crosstalk vs. Frequency

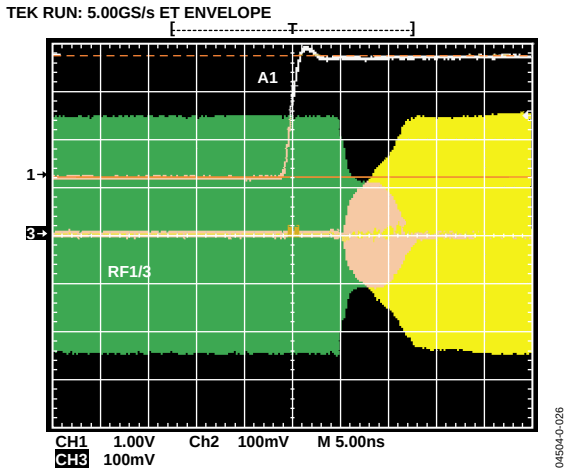

Figure 15. Switch Timing

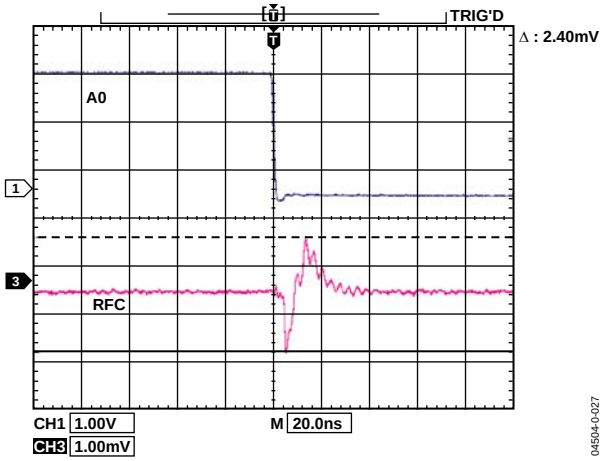

Figure 16. Video Feedthrough

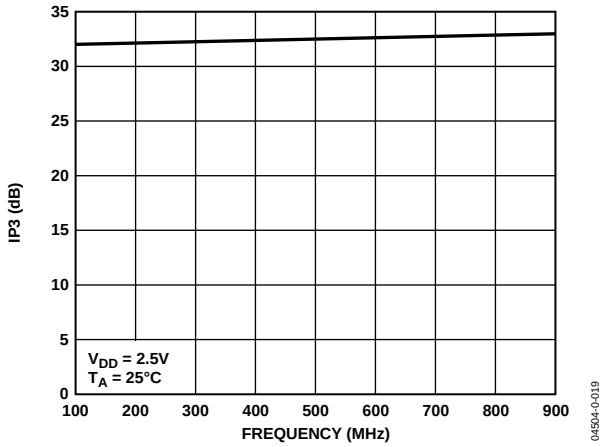

Figure 17. IP_3 vs. Frequency

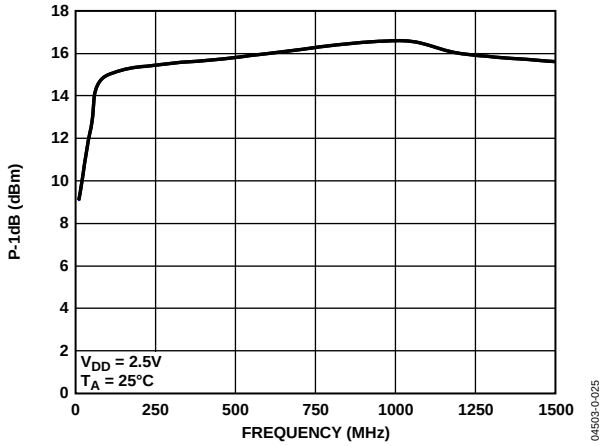

Figure 18. P-1 dB vs. Frequency

TEST CIRCUITS

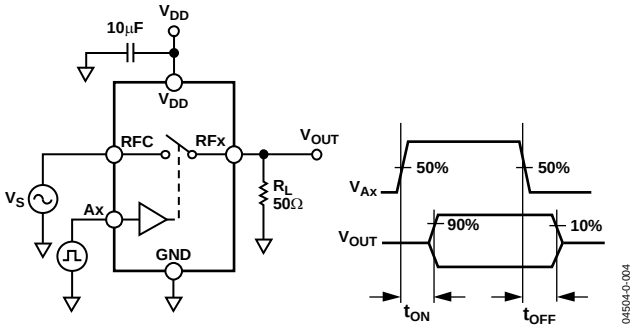

Figure 19. Switch Timing: t_{ON}, t_{OFF}

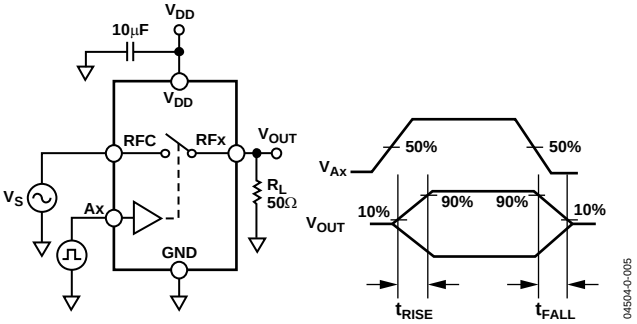

Figure 20. Switch Timing: t_{RISE}, t_{FALL}

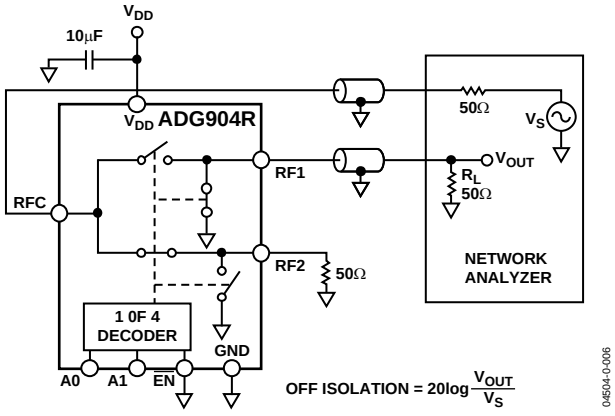

Figure 21. Off Isolation

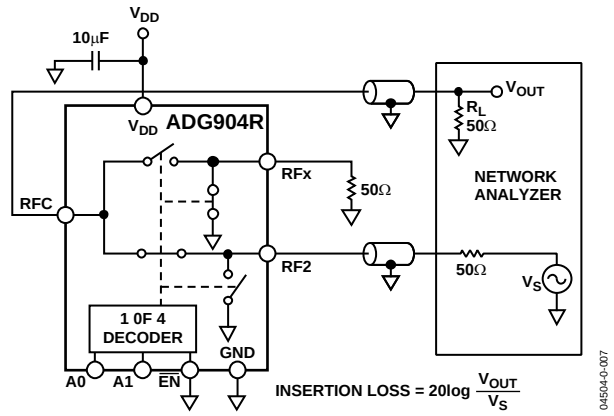

Figure 22. Insertion Loss

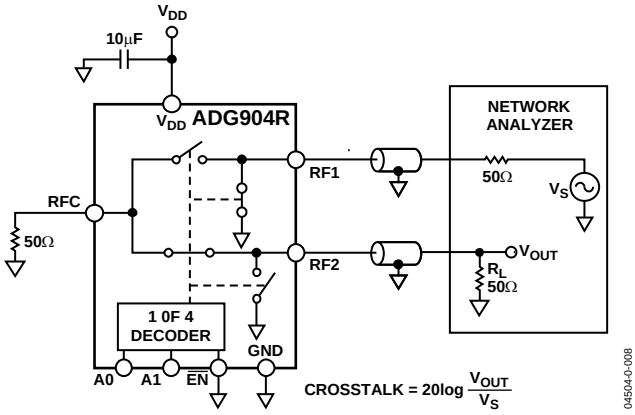

Figure 23. Crosstalk

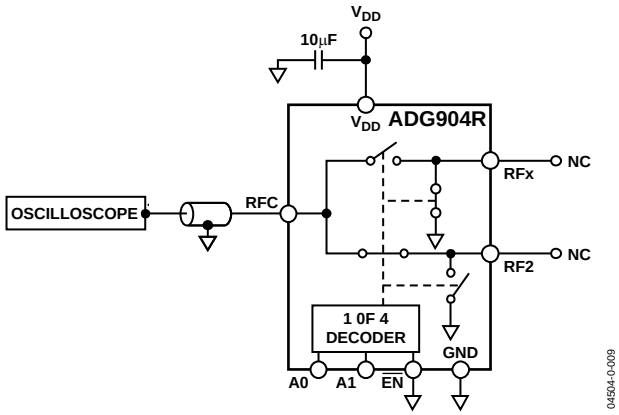

Figure 24. Video Feedthrough

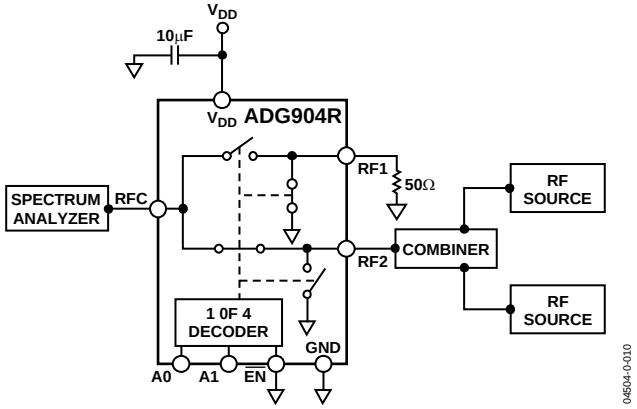

Figure 25. IP3

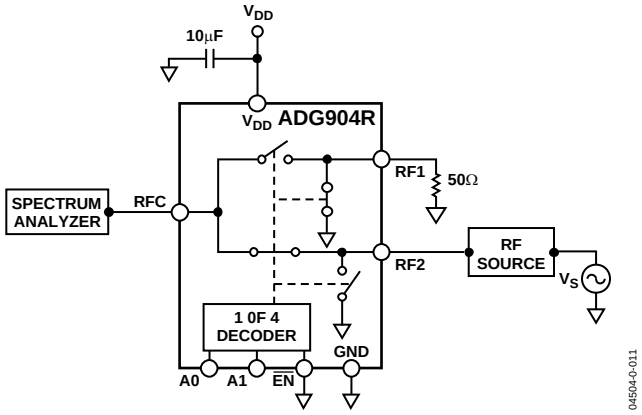

Figure 26. P-1 dB

APPLICATIONS

The ADG904 and ADG904-R are ideal solutions for low power, high frequency applications. The low insertion loss, high isolation between ports, low distortion, and low current consumption of these parts make them excellent solutions for many high frequency switching applications. They may be used in applications such as switchable filters, transmitters and receivers for radar systems, and communications systems from base stations to cell phones.

The ADG9xx wideband switches are designed to meet the demands of devices that transmit at ISM band frequencies of 1 GHz and higher. The low insertion loss, high isolation between ports, single pin control interface, no requirement for dc blocking capacitors, and TTL interface compatibility of these parts make them cost-effective and an easy-to-integrate switching solution for many high frequency switching applications and low power applications where the parts can handle up to 16 dBm of power.

ABSORPTIVE VS. REFLECTIVE

The ADG904 is an absorptive (matched) switch with 50 Ω terminated shunt legs; the ADG904-R is a reflective switch with 0 Ω terminated shunts to ground. The ADG904 absorptive switch has a good VSWR on each port, regardless of the switch mode. An absorptive switch should be used when there is a need for a good VSWR that is looking into the port but not passing the through signal to the common port. The ADG904 is therefore ideal for applications that require minimum reflections back to the RF source. It also ensures that the maximum power is transferred to the load.

The ADG904-R reflective switch is suitable for applications where high off port VSWR does not matter, and the switch has other performance features. It may be used in many applications, including high speed filter selection. In most cases, an absorptive switch may be used instead of a reflective switch, but not vice versa.

ANTENNA DIVERSITY SWITCH

The ADG904 is ideal for use as an antenna diversity switch, switching different antennas into the tuner. The low insertion loss ensures minimum signal loss and high isolation between channels, making these SP4T switches suitable for switching applications in tuner modules and set-top boxes.

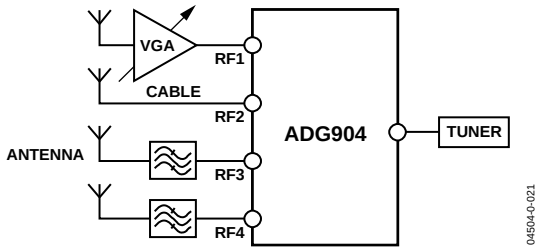

Figure 27. Tuner Modules

FILTER SELECTION

The ADG904 can be used to switch high frequency signals between different filters and to multiplex the signal to the output. These SP4T switches are also ideal for high speed signal routing.

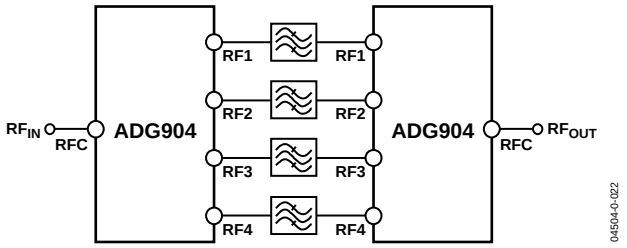

Figure 28. Filter Selection

Tx/Rx SWITCHING

The low insertion loss and high isolation between ports ensure that the ADG904 and ADG904-R are suitable transmit/receive switches for all ISM band and wireless LAN, providing the required isolation between the transmit signal and the receive signal.

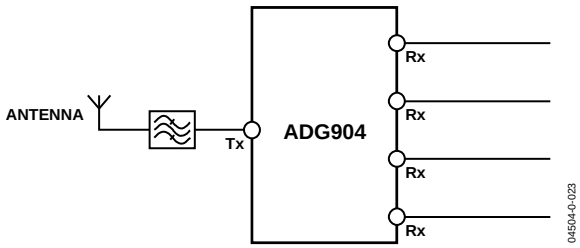

Figure 29. Tx/Rx Switching

EVALUATION BOARD

The ADG904/ADG904-R evaluation board allows designers to evaluate the high performance, wideband switches with minimal effort.

Only a power supply and a network analyzer, along with the evaluation board, are required to demonstrate that these devices meet user requirements. An application note, available with the evaluation board, provides complete operating information.

The RFC port (see Figure 30) is connected through a 50 Ω transmission line to the bottom left SMA connector, J4. RF1, RF2, RF3, and RF4 are connected through 50 Ω transmission lines to SMA connectors J5, J6, J7, and J8, respectively. A through transmission line connects J9 and J10; this transmission line is used to estimate the loss of the PCB over the environmental conditions being evaluated.

The board is constructed of four-layer, FR4 material with a dielectric constant of 4.3 and an overall thickness of 0.062 inches. Two ground layers with grounded planes provide ground for the RF transmission lines. The transmission lines were designed using a coplanar waveguide with a ground plane model using a trace width of 0.024 inches, clearance to ground plane of 0.008 inches, dielectric thickness of 0.02 inches, and a metal thickness of 0.0021 inches.

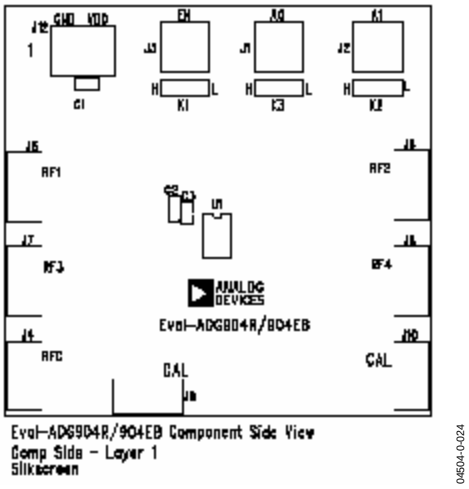

Figure 30. ADG904/ADG904-R Evaluation Board Top View

OUTLINE DIMENSIONS

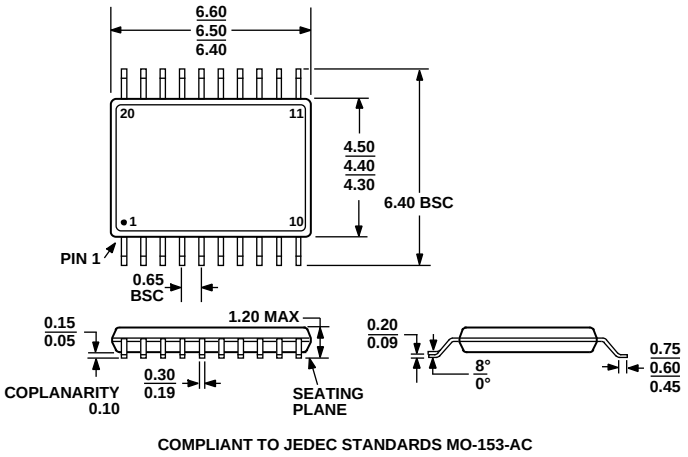

Figure 31. 20-Lead Thin Shrink Small Outline Package [TSSOP]
(RU-20)
Dimensions shown in millimeters

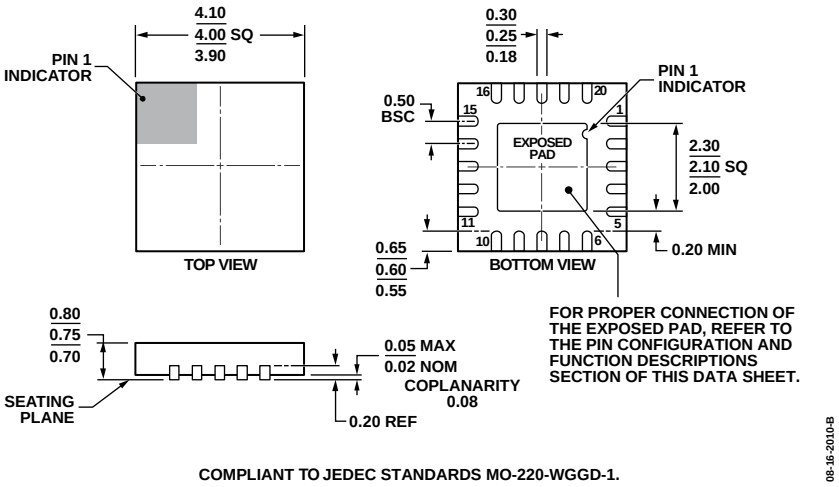

Figure 32. 20-Lead Lead Frame Chip Scale Package [LFCSP_WQ]
4 mm × 4 mm Body, Very Very Thin Quad
(CP-20-6)
Dimensions shown in millimeters

ORDERING GUIDE

Model[1, 2]	Temperature Range	Package Description	Package Option
ADG904BCPZ	−40°C to +85°C	20-Lead Lead Frame Chip Scale Package [LFCSP_WQ]	CP-20-6
ADG904BCPZ-R-REEL	−40°C to +85°C	20-Lead Lead Frame Chip Scale Package [LFCSP_WQ]	CP-20-6
ADG904BCPZ-REEL	−40°C to +85°C	20-Lead Lead Frame Chip Scale Package [LFCSP_WQ]	CP-20-6
ADG904BCPZ-REEL7	−40°C to +85°C	20-Lead Lead Frame Chip Scale Package [LFCSP_WQ]	CP-20-6
ADG904BRUZ	−40°C to +85°C	20-Lead Thin Shrink Small Outline Package [TSSOP]	RU-20
ADG904BRUZ-R	−40°C to +85°C	20-Lead Thin Shrink Small Outline Package (TSSOP)	RU-20
ADG904BRUZ-REEL7	−40°C to +85°C	20-Lead Thin Shrink Small Outline Package (TSSOP)	RU-20
ADW54011Z-0REEL7	−40°C to +85°C	20-Lead Thin Shrink Small Outline Package (TSSOP)	RU-20
EVAL-ADG904EBZ		Evaluation Board	
EVAL-ADG904REBZ		Evaluation Board	

[1] Z = RoHS compliant part.
[2] W = Qualified for Automotive Applications.

AUTOMOTIVE PRODUCTS

The ADW54011Z model is available with controlled manufacturing to support the quality and reliability requirements of automotive applications. Note that this automotive model may have specifications that differ from the commercial models; therefore, designers should review the Specifications section of this data sheet carefully. Only the automotive grade product shown are available for use in automotive applications. Contact your local Analog Devices account representative for specific product ordering information and to obtain the specific Automotive Reliability reports for this model.

NOTES

NOTES

©2004–2013 Analog Devices, Inc. All rights reserved. Trademarks and registered trademarks are the property of their respective owners.
D04504–0–1/13(C)

www.analog.com

Компания «ЭлектроПласт» предлагает заключение долгосрочных отношений при поставках импортных электронных компонентов на взаимовыгодных условиях!

Наши преимущества:

- Оперативные поставки широкого спектра электронных компонентов отечественного и импортного производства напрямую от производителей и с крупнейших мировых складов;
- Поставка более 17-ти миллионов наименований электронных компонентов;
- Поставка сложных, дефицитных, либо снятых с производства позиций;
- Оперативные сроки поставки под заказ (от 5 рабочих дней);
- Экспресс доставка в любую точку России;
- Техническая поддержка проекта, помощь в подборе аналогов, поставка прототипов;
- Система менеджмента качества сертифицирована по Международному стандарту ISO 9001;
- Лицензия ФСБ на осуществление работ с использованием сведений, составляющих государственную тайну;
- Поставка специализированных компонентов (Xilinx, Altera, Analog Devices, Intersil, Interpoint, Microsemi, Aeroflex, Peregrine, Syfer, Eurofarad, Texas Instrument, Miteq, Cobham, E2V, MA-COM, Hittite, Mini-Circuits,General Dynamics и др.);

Помимо этого, одним из направлений компании «ЭлектроПласт» является направление «Источники питания». Мы предлагаем Вам помощь Конструкторского отдела:

- Подбор оптимального решения, техническое обоснование при выборе компонента;
- Подбор аналогов;
- Консультации по применению компонента;
- Поставка образцов и прототипов;
- Техническая поддержка проекта;
- Защита от снятия компонента с производства.

Как с нами связаться

Телефон: 8 (812) 309 58 32 (многоканальный)
Факс: 8 (812) 320-02-42
Электронная почта: org@eplast1.ru
Адрес: 198099, г. Санкт-Петербург, ул. Калинина, дом 2, корпус 4, литера А.