STM8S001J3

16 MHz STM8S 8-bit MCU, 8-Kbyte Flash memory, 128-byte data EEPROM, 10-bit ADC, 3 timers, UART, SPI, I2C

Datasheet - production data

Features

Core

- 16 MHz advanced STM8 core with Harvard architecture and 3-stage pipeline
- Extended instruction set

Memories

- Program memory: 8 Kbytes Flash memory; data retention 20 years at 55 °C after 100 cycles
- RAM: 1 Kbyte
- Data memory: 128-byte true data EEPROM; endurance up to 100 k write/erase cycles

Clock, reset and supply management

- 2.95 V to 5.5 V operating voltage
- Flexible clock control, 3 master clock sources
  - External clock input
  - Internal, user-trimmable 16 MHz RC
  - Internal low-power 128 kHz RC
- Clock security system with clock monitor
- Power management
  - Low-power modes (wait, active-halt, halt)
  - Switch-off peripheral clocks individually
  - Permanently active, low-consumption power-on and power-down reset

Interrupt management

- Nested interrupt controller with 32 interrupts
- Up to 5 external interrupts

SO8N
4.9x6 mm or 150 mils width

Timers

- Advanced control timer: 16-bit, 2 CAPCOM channels, 2 outputs, dead-time insertion and flexible synchronization
- 16-bit general purpose timer, with 3 CAPCOM channels (IC, OC or PWM)
- 8-bit basic timer with 8-bit prescaler
- Auto wakeup timer
- Window and independent watchdog timers

Communications interfaces

- UART, SmartCard, IrDA, LIN master mode
- SPI unidirectional interface up to 8 Mbit/s (master simplex mode, slave receiver only)
- I2C interface up to 400 Kbit/s

Analog to digital converter (ADC)

- 10-bit ADC, ± 1 LSB ADC with up to 3 multiplexed channels, scan mode and analog watchdog
- Internal reference voltage measurement

I/Os

- Up to 5 I/Os including 4 high-sink outputs
- Highly robust I/O design, immune against current injection

Development support

- Embedded single-wire interface module (SWIM) or fast on-chip programming and non-intrusive debugging

This is information on a product in full production. www.st.com

Contents

1 Introduction 8

2 Description 9

3 Block diagram 10

4 Functional overview 11

4.1 Central processing unit STM8 11

4.2 Single wire interface module (SWIM) and debug module (DM) 12

4.3 Interrupt controller 12

4.4 Flash program memory and data EEPROM 12

4.5 Clock controller 15

4.6 Power management 16

4.7 Watchdog timers 16

4.8 Auto wakeup counter 17

4.9 TIM1 - 16-bit advanced control timer 17

4.10 TIM2 - 16-bit general purpose timer 17

4.11 TIM4 - 8-bit basic timer 17

4.12 Analog-to-digital converter (ADC1) 18

4.13 Communication interfaces 18

4.13.1 UART1 19

4.13.2 SPI 19

4.13.3 I2C 20

5 Pinouts and pin descriptions 21

5.1 STM8S001J3 SO8N pinout and pin description 21

5.2 Alternate function remapping 24

6 Memory and register map 25

6.1 Memory map 25

6.2 Register map 26

6.2.1 I/O port hardware register map 26

6.2.2 General hardware register map 27

6.2.3 CPU/SWIM/debug module/interrupt controller registers 34

7 Interrupt vector mapping 36

8 Option bytes 37

8.1 Alternate function remapping bits 39

9 Electrical characteristics 40

9.1 Parameter conditions 40

9.1.1 Minimum and maximum values 40

9.1.2 Typical values 40

9.1.3 Typical curves 40

9.1.4 Loading capacitor 40

9.1.5 Pin input voltage 40

9.2 Absolute maximum ratings 41

9.3 Operating conditions 43

9.3.1 VCAP external capacitor 45

9.3.2 Supply current characteristics 45

9.3.3 External clock sources and timing characteristics 54

9.3.4 Internal clock sources and timing characteristics 54

9.3.5 Memory characteristics 57

9.3.6 I/O port pin characteristics 58

9.3.7 SPI serial peripheral interface 66

9.3.8 I2C interface characteristics 69

9.3.9 10-bit ADC characteristics 71

9.3.10 EMC characteristics 74

10 Package information 77

10.1 SO8N package information 77

10.2 Thermal characteristics 79

10.2.1 Reference document 80

10.2.2 Selecting the product temperature range 80

11 Ordering information 81

12 STM8 development tools 82

12.1 Emulation and in-circuit debugging tools 82

12.2 Software tools 83
12.2.1 STM8 toolset 83
12.2.2 C and assembly toolchains 83
12.3 Programming tools 83

13 Revision history 84

List of tables

Table 1. STM8S001J3 features . . . 9
Table 2. Peripheral clock gating bit assignments in CLK_PCKENR1/2 registers . . . 15
Table 3. TIM timer features . . . 18
Table 4. Legend/abbreviations for STM8S001J3 pin description tables . . . 21
Table 5. STM8S001J3 pin description . . . 22
Table 6. Flash, Data EEPROM and RAM boundary addresses . . . 26
Table 7. I/O port hardware register map . . . 26
Table 8. General hardware register map . . . 28
Table 9. CPU/SWIM/debug module/interrupt controller registers . . . 34
Table 10. Interrupt mapping . . . 36
Table 11. Option bytes . . . 37
Table 12. Option byte description . . . 37
Table 13. STM8S001J3 alternate function remapping bits for 8-pin devices . . . 39
Table 14. Voltage characteristics . . . 41
Table 15. Current characteristics . . . 42
Table 16. Thermal characteristics . . . 42
Table 17. General operating conditions . . . 43
Table 18. Operating conditions at power-up/power-down . . . 44
Table 19. Total current consumption with code execution in run mode at V_{DD} = 5 V . . . 45
Table 20. Total current consumption with code execution in run mode at V_{DD} = 3.3 V . . . 46
Table 21. Total current consumption in wait mode at V_{DD} = 5 V . . . 47
Table 22. Total current consumption in wait mode at V_{DD} = 3.3 V . . . 47
Table 23. Total current consumption in active halt mode at V_{DD} = 5 V . . . 48
Table 24. Total current consumption in active halt mode at V_{DD} = 3.3 V . . . 48
Table 25. Total current consumption in halt mode at V_{DD} = 5 V . . . 49
Table 26. Total current consumption in halt mode at V_{DD} = 3.3 V . . . 49
Table 27. Wakeup times . . . 49
Table 28. Total current consumption and timing in forced reset state . . . 50
Table 29. Peripheral current consumption . . . 50
Table 30. HSE user external clock characteristics . . . 54
Table 31. HSI oscillator characteristics . . . 55
Table 32. LSI oscillator characteristics . . . 55
Table 33. RAM and hardware registers . . . 57
Table 34. Flash program memory and data EEPROM . . . 57
Table 35. I/O static characteristics . . . 58
Table 36. Output driving current (standard ports) . . . 60
Table 37. Output driving current (true open drain ports) . . . 60
Table 38. Output driving current (high sink ports) . . . 61
Table 39. SPI characteristics . . . 66
Table 40. I2C characteristics . . . 69
Table 41. ADC characteristics . . . 71
Table 42. ADC accuracy with R_{AIN} < 10 kΩ , V_{DD} = 5 V . . . 72
Table 43. ADC accuracy with R_{AIN} < 10 kΩ R_{AIN}, V_{DD} = 3.3 V . . . 72
Table 44. EMS data . . . 74
Table 45. EMI data . . . 75
Table 46. ESD absolute maximum ratings . . . 75
Table 47. Electrical sensitivities . . . 76
Table 48. SO8N – 8-lead 4.9 x 6 mm, plastic small outline, 150 mils body width,

package mechanical data 77
Table 49. Thermal characteristics. 80
Table 50. Document revision history 84

List of figures

Figure 1. STM8S001J3 block diagram . . . 10
Figure 2. Flash memory organization . . . 13
Figure 3. STM8S001J3 SO8N pinout . . . 21
Figure 4. Memory map . . . 25
Figure 5. Pin loading conditions . . . 40
Figure 6. Pin input voltage . . . 41
Figure 7. f_{CPUmax} versus V_{DD} . . . 43
Figure 8. External capacitor C_{EXT} . . . 45
Figure 9. Typ. $I_{DD(RUN)}$ vs V_{DD}, HSE user external clock, f_{CPU} = 16 MHz . . . 51
Figure 10. Typ. $I_{DD(RUN)}$ vs f_{CPU}, HSE user external clock, V_{DD} = 5 V . . . 51
Figure 11. Typ. $I_{DD(RUN)}$ vs V_{DD}, HSI RC osc, f_{CPU} = 16 MHz . . . 52
Figure 12. Typ. $I_{DD(WFI)}$ vs. V_{DD} HSE user external clock, f_{CPU} = 16 MHz . . . 52
Figure 13. Typ. $I_{DD(WFI)}$ vs. f_{CPU}, HSE user external clock, V_{DD} = 5 V . . . 53
Figure 14. Typ. $I_{DD(WFI)}$ vs V_{DD}, HSI RC osc, f_{CPU} = 16 MHz . . . 53
Figure 15. HSE external clock source . . . 54
Figure 16. Typical HSI frequency variation vs V_{DD} at 4 temperatures . . . 55
Figure 17. Typical LSI frequency variation vs V_{DD} @ 4 temperatures . . . 56
Figure 18. Typical V_{IL} and V_{IH} vs V_{DD} @ 4 temperatures . . . 59
Figure 19. Typical pull-up resistance vs V_{DD} @ 4 temperatures . . . 59
Figure 20. Typical pull-up current vs V_{DD} @ 4 temperatures . . . 60
Figure 21. Typ. V_{OL} @ V_{DD} = 5 V (standard ports) . . . 61
Figure 22. Typ. V_{OL} @ V_{DD} = 3.3 V (standard ports) . . . 62
Figure 23. Typ. V_{OL} @ V_{DD} = 5 V (true open drain ports) . . . 62
Figure 24. Typ. V_{OL} @ V_{DD} = 3.3 V (true open drain ports) . . . 63
Figure 25. Typ. V_{OL} @ V_{DD} = 5 V (high sink ports) . . . 63
Figure 26. Typ. V_{OL} @ V_{DD} = 3.3 V (high sink ports) . . . 64
Figure 27. Typ. V_{DD} - V_{OH} @ V_{DD} = 5 V (standard ports) . . . 64
Figure 28. Typ. V_{DD} - V_{OH} @ V_{DD} = 3.3 V (standard ports) . . . 65
Figure 29. Typ. V_{DD} - V_{OH} @ V_{DD} = 5 V (high sink ports) . . . 65
Figure 30. Typ. V_{DD} - V_{OH} @ V_{DD} = 3.3 V (high sink ports) . . . 66
Figure 31. SPI timing diagram - slave mode and CPHA = 0 . . . 67
Figure 32. SPI timing diagram - slave mode and CPHA = 1(1) . . . 68
Figure 33. SPI timing diagram - master mode(1) . . . 68
Figure 34. Typical application with I2C bus and timing diagram . . . 70
Figure 35. ADC accuracy characteristics . . . 73
Figure 36. Typical application with ADC . . . 73
Figure 37. SO8N – 8-lead, 4.9 x 6 mm, plastic small outline, 150 mils body width, package outline . 77
Figure 38. SO8N – 8-lead 4.9 x 6 mm, plastic small outline, 150 mils body width, package recommended footprint . . . 78
Figure 39. SO8N – 8-lead 4.9 x 6 mm, plastic small outline, 150 mils body width, marking example . . . 79
Figure 40. STM8S001J3 ordering information scheme(1) . . . 81

1 Introduction

This datasheet contains the description of the STM8S001J3 features, pinout, electrical characteristics, mechanical data and ordering information.

- For complete information on the STM8S microcontroller memory, registers and peripherals, please refer to the STM8S and STM8A microcontroller families reference manual (RM0016).
- For information on programming, erasing and protection of the internal Flash memory please refer to the PM0051 (How to program STM8S and STM8A Flash program memory and data EEPROM).
- For information on the debug and SWIM (single wire interface module) refer to the STM8 SWIM communication protocol and debug module user manual (UM0470).
- For information on the STM8 core, please refer to the STM8 CPU programming manual (PM0044).

2 Description

The STM8S001J3 8-bit microcontrollers offer 8 Kbytes of Flash program memory, plus integrated true data EEPROM. It is referred to as low-density device in the STM8S microcontroller family reference manual (RM0016).

The STM8S001J3 device provides the following benefits: performance, robustness and reduced system cost.

Device performance and robustness are ensured by true data EEPROM supporting up to 100000 write/erase cycles, advanced core and peripherals made in a state-of-the-art technology at 16 MHz clock frequency, robust I/Os, independent watchdogs with separate clock source, and a clock security system.

The system cost is reduced thanks to a high system integration level with internal clock oscillators, watchdog, and brown-out reset.

Full documentation is offered as well as a wide choice of development tools.

Table 1. STM8S001J3 features

Features	STM8S001J3
Pin count	8
Max. number of GPIOs (I/O)	5
External interrupt pins	5
Timer CAPCOM channels	3
Timer complementary outputs	1
A/D converter channels	3
High-sink I/Os	4
Low-density Flash program memory (byte)	8 K
RAM (byte)	1 K
True data EEPROM (byte)	128[1]
Peripheral set	Multi purpose timer (TIM1), SPI unidirectional, I2C, UART, Window WDG, independent WDG, ADC, PWM timer (TIM2), 8-bit timer (TIM4)

1. Without read-while-write capability.

3 Block diagram

Figure 1. STM8S001J3 block diagram

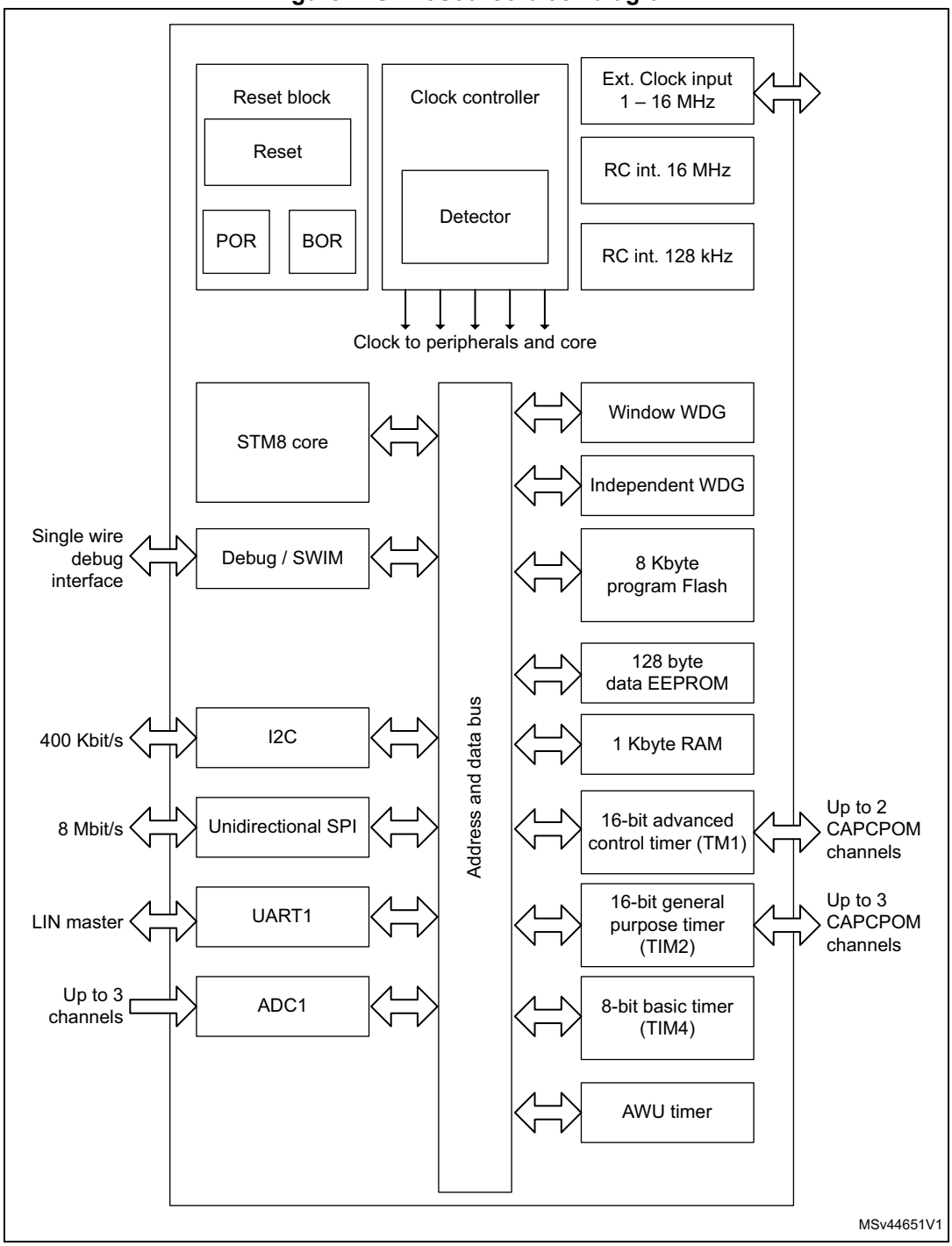

4 Functional overview

The following section intends to give an overview of the basic features of the STM8S001J3 functional modules and peripherals.

For more detailed information please refer to the corresponding family reference manual (RM0016).

4.1 Central processing unit STM8

The 8-bit STM8 core is designed for code efficiency and performance.

It contains six internal registers which are directly addressable in each execution context, 20 addressing modes including indexed indirect and relative addressing and 80 instructions.

Architecture and registers

- Harvard architecture
- 3-stage pipeline
- 32-bit wide program memory bus - single cycle fetching for most instructions
- X and Y 16-bit index registers - enabling indexed addressing modes with or without offset and read-modify-write type data manipulations
- 8-bit accumulator
- 24-bit program counter - 16-Mbyte linear memory space
- 16-bit stack pointer - access to a 64 K-level stack
- 8-bit condition code register - 7 condition flags for the result of the last instruction

Addressing

- 20 addressing modes
- Indexed indirect addressing mode for look-up tables located anywhere in the address space
- Stack pointer relative addressing mode for local variables and parameter passing

Instruction set

- 80 instructions with 2-byte average instruction size
- Standard data movement and logic/arithmetic functions
- 8-bit by 8-bit multiplication
- 16-bit by 8-bit and 16-bit by 16-bit division
- Bit manipulation
- Data transfer between stack and accumulator (push/pop) with direct stack access
- Data transfer using the X and Y registers or direct memory-to-memory transfers

4.2 Single wire interface module (SWIM) and debug module (DM)

The single wire interface module and debug module permits non-intrusive, real-time in-circuit debugging and fast memory programming.

SWIM

Single wire interface module for direct access to the debug module and memory programming. The interface can be activated in all device operation modes. The maximum data transmission speed is 145 byte/ms.

Debug module

The non-intrusive debugging module features a performance close to a full-featured emulator. Beside memory and peripherals, also CPU operation can be monitored in real-time by means of shadow registers.

- R/W to RAM and peripheral registers in real-time
- R/W access to all resources by stalling the CPU
- Breakpoints on all program-memory instructions (software breakpoints)
- Two advanced breakpoints, 23 predefined configurations

Recommendation for SWIM pin (pin #8) sharing

As the NRST pin is not available on this device, if the SWIM pin should be used with the I/O pin functionality, it is recommended to add a ~5 seconds delay in the firmware before changing the functionality on the pin with SWIM functions. This action allows the user to set the device into SWIM mode after the device power on and to be able to reprogram the device. If the pin with SWIM functionality is set to I/O mode immediately after the device reset, the device is unable to connect through the SWIM interface and it gets locked forever. This initial delay can be removed in the final (locked) code.

If the initial delay is not acceptable for the application there is the option that the firmware reenables the SWIM pin functionality under specific conditions such as during firmware startup or during application run. Once that this procedure is done, the SWIM interface can be used for device debug/programming.

4.3 Interrupt controller

- Nested interrupts with three software priority levels
- 32 interrupt vectors with hardware priority
- Up to 5 external interrupts including TLI
- Trap and reset interrupts

4.4 Flash program memory and data EEPROM

- 8 Kbytes of Flash program single voltage Flash memory
- 128 byte true data EEPROM
- User option byte area

Write protection (WP)

Write protection of Flash program memory and data EEPROM is provided to avoid unintentional overwriting of memory that could result from a user software malfunction.

There are two levels of write protection. The first level is known as MASS (memory access security system). MASS is always enabled and protects the main Flash program memory, data EEPROM and option bytes.

To perform in-application programming (IAP), this write protection can be removed by writing a MASS key sequence in a control register. This allows the application to modify the content of main program memory and data EEPROM, or to reprogram the device option bytes.

A second level of write protection, can be enabled to further protect a specific area of memory known as UBC (user boot code). Refer to *Figure 2*.

The size of the UBC is programmable through the UBC option byte (*Table 12*), in increments of 1 page (64-byte block) by programming the UBC option byte in ICP mode.

This divides the program memory into two areas:

- Main program memory: 8 Kbyte minus UBC
- User-specific boot code (UBC): Configurable up to 8 Kbyte

The UBC area remains write-protected during in-application programming. This means that the MASS keys do not unlock the UBC area. It protects the memory used to store the boot program, specific code libraries, reset and interrupt vectors, the reset routine and usually the IAP and communication routines.

Figure 2. Flash memory organization

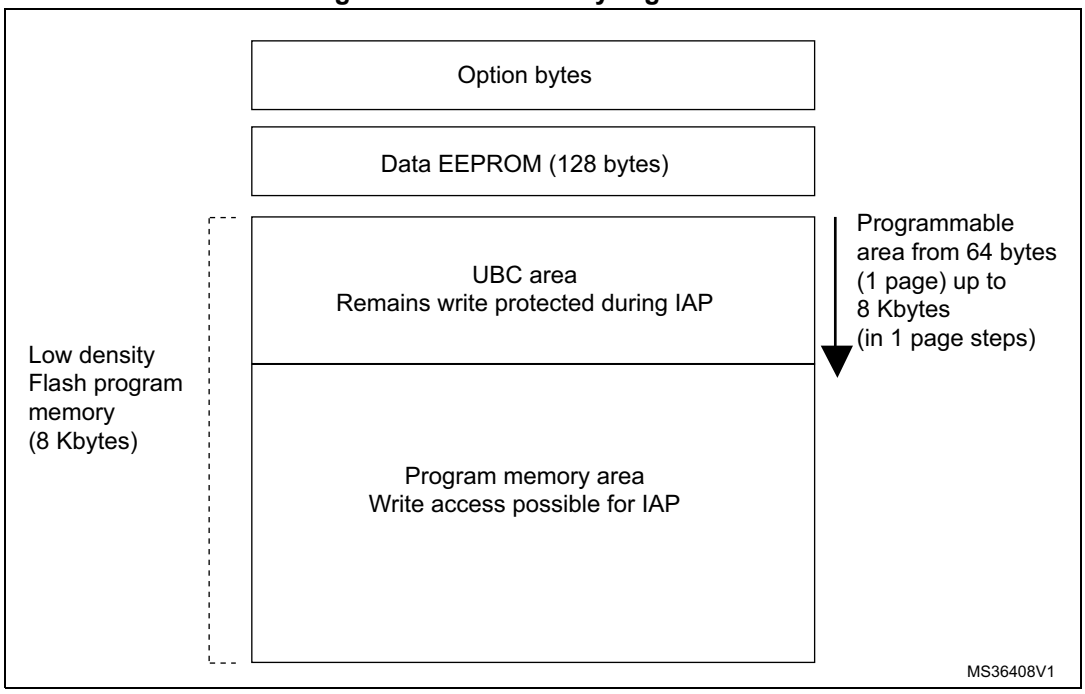

Read-out protection (ROP)

The read-out protection blocks reading and writing the Flash program memory and data EEPROM memory in ICP mode (and debug mode). Once the read-out protection is activated, any attempt to toggle its status triggers a global erase of the program memory. Even if no protection can be considered as totally unbreakable, the feature provides a very high level of protection for a general purpose microcontroller.

Recommendation for the device's programming:

The device's 8 Kbytes program memory is not empty on virgin devices; there is code loop implemented on the reset vector. It is recommended to keep valid code loop in the device to avoid the program execution from an invalid memory address (which would be any memory address out of 8 Kbytes program memory space).

If the device's program memory is empty (0x00 content), it displays the behavior described below:

- After the power on, the “empty” code is executed (0x0000 opcodes = instructions: NEG (0x00, SP)) until the device reaches the end of the 8 Kbytes program memory (the end address = 0x9FFF).
  It takes around 4 milliseconds to reach the end of the 8 Kbytes memory space @2 MHz HSI clock.
- Once the device reaches the end of the 8 Kbytes program memory, the program continues and code from a non-existing memory is fetched and executed.
  The reading of non-existing memory is a random content which can lead to the execution of invalid instructions.
  The execution of invalid instructions generates a software reset and the program starts again. A reset can be generated every 4 milliseconds or more.

Only the “connect on-the-fly” method can be used to program the device through the SWIM interface. The “connect under-reset” method cannot be used because the NRST pin is not available on this device.

The “connect on-the-fly” mode can be used while the device is executing code, but if there is a device reset (by software reset) during the SWIM connection, this connection is aborted and it must be performed again from the debug tool. Note that the software reset occurrence can be of every 4 milliseconds, making it difficult to successfully connect to the device's debug tool (there is practically only one successful connection trial for every 10 attempts). Once that a successful connection is reached, the device can be programmed with a valid firmware without problems; therefore it is recommended that device is never erased and that is contains always a valid code loop.

4.5 Clock controller

The clock controller distributes the system clock (f_{MASTER}) coming from different oscillators to the core and the peripherals. It also manages clock gating for low power modes and ensures clock robustness.

Features

- ***Clock prescaler***: To get the best compromise between speed and current consumption the clock frequency to the CPU and peripherals can be adjusted by a programmable prescaler.
- ***Safe clock switching***: Clock sources can be changed safely on the fly in run mode through a configuration register. The clock signal is not switched until the new clock source is ready. The design guarantees glitch-free switching.
- ***Clock management***: To reduce power consumption, the clock controller can stop the clock to the core, individual peripherals or memory.
- ***Master clock sources***: Three different clock sources can be used to drive the master clock:
  - Up to 16 MHz high-speed user-external clock (HSE user-ext)
  - 16 MHz high-speed internal RC oscillator (HSI)
  - 128 kHz low-speed internal RC (LSI)
- ***Startup clock***: After reset, the microcontroller restarts by default with an internal 2 MHz clock (HSI/8). The prescaler ratio and clock source can be changed by the application program as soon as the code execution starts.
- ***Clock security system (CSS)***: This feature can be enabled by software. If an HSE clock failure occurs, the internal RC (16 MHz/8) is automatically selected by the CSS and an interrupt can optionally be generated.
- ***Configurable main clock output (CCO)***: This outputs an external clock for use by the application.

Table 2. Peripheral clock gating bit assignments in CLK_PCKENR1/2 registers

Bit	Peripheral clock	Bit	Peripheral clock	Bit	Peripheral clock	Bit	Peripheral clock
PCKEN17	TIM1	PCKEN13	UART1	PCKEN27	Reserved	PCKEN23	ADC
PCKEN16	Reserved	PCKEN12	Reserved	PCKEN26	Reserved	PCKEN22	AWU
PCKEN15	TIM2	PCKEN11	SPI	PCKEN25	Reserved	PCKEN21	Reserved
PCKEN14	TIM4	PCKEN10	I2C	PCKEN24	Reserved	PCKEN20	Reserved

4.6 Power management

For efficient power management, the application can be put in one of four different low-power modes. You can configure each mode to obtain the best compromise between the lowest power consumption, the fastest start-up time and available wakeup sources.

- ***Wait mode***: In this mode, the CPU is stopped, but peripherals are kept running. The wakeup is performed by an internal or external interrupt or reset.
- ***Active halt mode with regulator on***: In this mode, the CPU and peripheral clocks are stopped. An internal wakeup is generated at programmable intervals by the auto wake up unit (AWU). The main voltage regulator is kept powered on, so current consumption is higher than in active halt mode with regulator off, but the wakeup time is faster. Wakeup is triggered by the internal AWU interrupt, external interrupt or reset.
- ***Active halt mode with regulator off:*** This mode is the same as active halt with regulator on, except that the main voltage regulator is powered off, so the wake up time is slower.
- ***Halt mode***: In this mode the microcontroller uses the least power. The CPU and peripheral clocks are stopped, the main voltage regulator is powered off. Wakeup is triggered by external event or reset.

4.7 Watchdog timers

The watchdog system is based on two independent timers providing maximum security to the applications.

Activation of the watchdog timers is controlled by option bytes or by software. Once activated, the watchdogs cannot be disabled by the user program without performing a reset.

Window watchdog timer

The window watchdog is used to detect the occurrence of a software fault, usually generated by external interferences or by unexpected logical conditions, which cause the application program to abandon its normal sequence.

The window function can be used to trim the watchdog behavior to match the application perfectly.

The application software must refresh the counter before time-out and during a limited time window.

A reset is generated in two situations:

1. Timeout: at 16 MHz CPU clock the time-out period can be adjusted between 75 µs up to 64 ms.
2. Refresh out of window: the down-counter is refreshed before its value is lower than the one stored in the window register.

Independent watchdog timer

The independent watchdog peripheral can be used to resolve processor malfunctions due to hardware or software failures.

It is clocked by the 128 kHz LSI internal RC clock source, and thus stays active even in case of a CPU clock failure

The IWDG time base spans from 60 µs to 1 s.

4.8 Auto wakeup counter

- Used for auto wakeup from active halt mode
- Clock source: internal 128 kHz internal low frequency RC oscillator or external clock
- LSI clock can be internally connected to TIM1 input capture channel 1 for calibration

4.9 TIM1 - 16-bit advanced control timer

This is a high-end timer designed for a wide range of control applications. With its complementary outputs, dead-time control and center-aligned PWM capability, the field of applications is extended to lighting and half-bridge driver.

- 16-bit up, down and up/down autoreload counter with 16-bit prescaler
- Four independent capture/compare channels (CAPCOM) configurable as input capture, output compare, PWM generation (edge and center aligned mode) and single pulse mode output
- Synchronization module to control the timer with external signals
- Break input to force the timer outputs into a defined state
- One complementary output (CH1 with CH1N option) with adjustable dead time
- Interrupt sources: 3 x input capture/output compare, 1 x overflow/update, 1 x break

4.10 TIM2 - 16-bit general purpose timer

- 16-bit autoreload (AR) up-counter
- 15-bit prescaler adjustable to fixed power of 2 ratios 1…32768
- 3 individually configurable capture/compare channels
- PWM mode
- Interrupt sources: 3 x input capture/output compare, 1 x overflow/update

4.11 TIM4 - 8-bit basic timer

- 8-bit autoreload, adjustable prescaler ratio to any power of 2 from 1 to 128
- Clock source: CPU clock
- Interrupt source: 1 x overflow/update

Table 3. TIM timer features

Timer	Counter size (bits)	Prescaler	Counting mode	CAPCOM channels	Complem. outputs	Ext. trigger	Timer synchr-onization/ chaining
TIM1	16	Any integer from 1 to 65536	Up/down	2	1(1)	No	No
TIM2	16	Any power of 2 from 1 to 32768	Up	3	0	No	
TIM4	8	Any power of 2 from 1 to 128	Up	0	0	No	

1. TIM1_CH2N with TIM1_CH1

4.12 Analog-to-digital converter (ADC1)

STM8S001J3 contains a 10-bit successive approximation A/D converter (ADC1) with up to three external and one internal multiplexed input channels and the following main features:

- Input voltage range: 0 to V_{DDA}
- Conversion time: 14 clock cycles
- Single and continuous, buffered continuous conversion modes
- Buffer size (10 x 10 bits)
- Scan mode for single and continuous conversion of a sequence of channels
- Analog watchdog capability with programmable upper and lower thresholds
- Analog watchdog interrupt
- Internal reference voltage on channel AIN7
- External trigger input
- Trigger from TIM1 TRGO
- End of conversion (EOC) interrupt

next paragraph :

Internal bandgap reference voltage

Channel AIN7 is internally connected to the internal bandgap reference voltage. The internal bandgap reference is constant and can be used, for example, to monitor V_{DD} or to determine the absolute voltage on external input channels. It is independent of variations in V_{DD} and ambient temperature T_A.

4.13 Communication interfaces

The following communication interfaces are implemented:

- UART1: full feature UART, synchronous mode, SmartCard mode, IrDA mode, LIN2.1 master capability
- SPI: master mode transmit/receive only, slave mode receive only, 8 Mbit/s
- I²C: up to 400 Kbit/s

4.13.1 UART1

Main features

- 1 Mbit/s full duplex SCI
- High precision baud rate generator
- Smartcard reader emulation
- IrDA SIR encoder decoder
- LIN master mode
- Single wire half duplex mode

Asynchronous communication (UART mode)

- Full duplex communication - NRZ standard format (mark/space)
- Programmable transmit and receive baud rates up to 1 Mbit/s (f_{CPU}/16) and capable of following any standard baud rate regardless of the input frequency
- Separate enable bits for transmitter and receiver
- Two receiver wakeup modes:
  - Address bit (MSB)
  - Idle line (interrupt)
- Transmission error detection with interrupt generation
- Parity control

LIN master mode

- Emission: generates 13-bit synch. break frame
- Reception: detects 11-bit break frame

4.13.2 SPI

- Maximum speed: 8 Mbit/s (f_{MASTER}/2) both for master and slave
- Unidirectional transfer: SPI master mode transmit/receive only, SPI slave mode receive only
- Simplex master synchronous transfers on two lines with a possible bidirectional data line
- Master or slave operation - selectable by software
- CRC calculation
- 1 byte Tx and Rx buffer

4.13.3 I2C

- I2C master features
  - Clock generation
  - Start and stop generation
- I2C slave features
  - Programmable I2C address detection
  - Stop bit detection
- Generation and detection of 7-bit/10-bit addressing and general call
- Supports different communication speeds
  - Standard speed (up to 100 kHz)
  - Fast speed (up to 400 kHz)

5 Pinouts and pin descriptions

This section presents the pinouts and pin descriptions for STM8S001J3. *Table 4* introduces the legends and abbreviations that are used in the upcoming subsections.

Table 4. Legend/abbreviations for STM8S001J3 pin description tables

Type	I = input, O = output, S = power supply	
Level	Input	CM = CMOS
	Output	HS = high sink
Output speed	O1 = slow (up to 2 MHz) O2 = fast (up to 10 MHz) O3 = fast/slow programmability with slow as default state after reset O4 = fast/slow programmability with fast as default state after reset	
Port and control configuration	Input	float = floating, wpu = weak pull-up
	Output	T = true open drain, OD = open drain, PP = push pull
Reset state	Bold **x** (pin state after internal reset release) Unless otherwise specified, the pin state is the same during the reset phase and after the internal reset release.	

5.1 STM8S001J3 SO8N pinout and pin description

Figure 3 presents the STM8S001J3 pinout image and *Table 5* below presents the device's pins description.

Figure 3. STM8S001J3 SO8N pinout

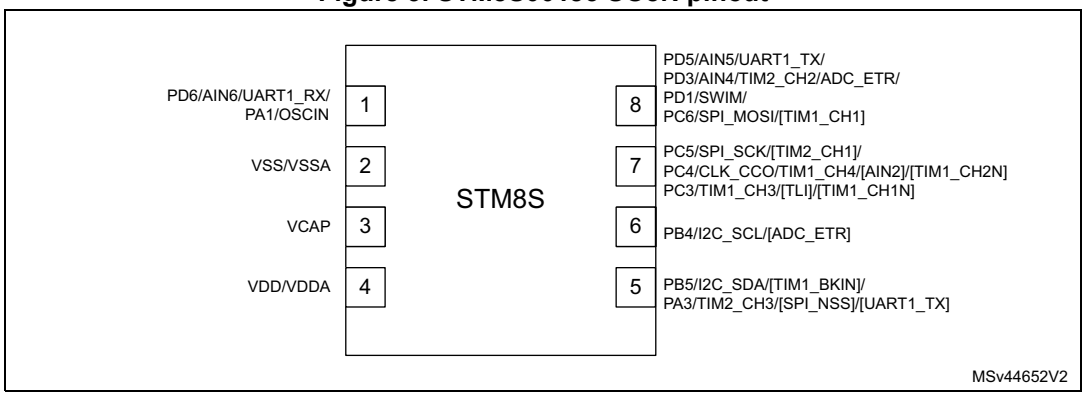

1. [ ] Alternative function option (if the same alternate function is shown twice, it indicated an exclusive choice and not a duplication of the function).

Table 5. STM8S001J3 pin description

Pin no.	Pin name	Type	Input			Output				Main function (after reset)	Default alternate function	Alternate function after remap [option bit]
SO8N			floating	wpu	Ext. interr.	High sink(1)	Speed	OD	PP			
1	PD6/ AIN6/ UART1 _RX(2)	I/O	**X**	X	X	HS	O3	X	X	Port D6	Analog input 6/ UART1 data receive	-
	PA1/ OSCIN(3)	I/O	**X**	X	X	-	O1	X	X	Port A1	External clock input (HSE clock)	-
2	VSS/VSSA	S	-	-	-	-	-	-	-	Ground		-
3	VCAP	S	-	-	-	-	-	-	-	1.8 V regulator capacitor		-
4	VDD/VDDA	S	-	-	-	-	-	-	-	Power supply		-
5	PA3/ TIM2_ CH3 [SPI_ NSS]\ [UART1_TX](2)	I/O	**X**	X	X	HS	O3	X	X	Port A3	Timer 2 channel 3	SPI master/ slave select [AFR1] UART1 data transmit [AFR1 and AFR0]
	PB5/ I2C_ SDA [TIM1_ BKIN]	I/O	**X**	-	X	-	O1	T(4)	-	Port B5	I2C data	Timer 1 - break input [AFR4]
6	PB4/ I2C_ SCL /[ADC_ETR]	I/O	**X**	-	X	-	O1	T(4)	-	Port B4	I2C clock	ADC external trigger [AFR4]
7	PC3/ TIM1_CH3 [TLI] [TIM1_ CH1N]	I/O	**X**	X	X	HS	O3	X	X	Port C3	Timer 1 - channel 3	Top level interrupt [AFR3] Timer 1 - inverted channel 1 [AFR7]
	PC4/ CLK_CCO/ TIM1_ CH4/[AIN2]/ [TIM1_ CH2N]	I/O	**X**	X	X	HS	O3	X	X	Port C4	Configurable clock output/Timer 1 - channel 4	Analog input 2 [AFR2], Timer 1 - inverted channel 2 [AFR7]
	PC5/ SPI_SCK [TIM2_ CH1]	I/O	**X**	X	X	HS	O3	X	X	Port C5	SPI clock	Timer 2 - channel 1 [AFR0]

Table 5. STM8S001J3 pin description (continued)

Pin no.	Pin name	Type	Input			Output				Main function (after reset)	Default alternate function	Alternate function after remap [option bit]
SO8N			floating	wpu	Ext. interr.	High sink(1)	Speed	OD	PP			
8	PC6/ SPI_MOSI [TIM1_ CH1]	I/O	**X**(5)	X	X	HS	O3	X	X	Port C6	SPI master out/slave in	Timer 1 - channel 1 [AFR0]
	PD1/ SWIM(5)	I/O	X	**X**(5)	X	HS	O4	X	X	Port D1	SWIM data interface	-
	PD3/ AIN4/ TIM2_ CH2/ ADC_ ETR	I/O	**X**(5)	X	X	HS	O3	X	X	Port D3	Analog input 4/ Timer 2 - channel 2/ADC external trigger	-
	PD5/ AIN5/ UART1 _TX	I/O	**X**(5)	X	X	HS	O3	X	X	Port D5	Analog input 5/ UART1 data transmit	-

1. I/O pins used simultaneously for high current source/sink must be uniformly spaced around the package. In addition, the total driven current must respect the absolute maximum ratings.
2. By remapping UART1_TX (AFR0=1 and AFR1=1) to PA3 the UART1_RX alternate function on PD6 becomes unavailable. UART1 can be then used only in Single wire half-duplex mode or in Smartcard-reader emulation mode.
3. When the MCU is in halt/active-halt mode, PA1 is automatically configured in input weak pull-up and cannot be used for waking up the device. In this mode, the output state of PA1 is not driven. It is recommended d to use PA1 only in input mode if halt/active-halt is used in the application.
4. In the open-drain output column, “T” defines a true open-drain I/O (P-buffer, weak pull-up, and protection diode to VDD are not implemented). Although PB5 itself is a true open drain GPIO with its respective internal circuitry and characteristics, V_{IN} maximum of the pin number 5 is limited by the standard GPIO PA3 which is also bonded to pin number 5.
5. The PD1 pin is in input pull-up during the reset phase and after internal reset release. This PD1 default state influences all GPIOs connected in parallel on pin# 8 (PC6, PD3, PD5).

Note: The PA2, PB0, PB1, PB2, PB3, PB6, PB7, PC1, PC2, PC7, PD0, PD2, PD4, PD7, PE5 and PF4 GPIOs should be configured after device reset in output push-pull mode with output low-state to reduce the device’s consumption and to improve its EMC immunity. The GPIOs mentioned above are not connected to pins, and they are in input-floating mode after a device reset.

Note: As several pins provide a connection to multiple GPIOs, the mode selection for any of those GPIOs impacts all the other GPIOs connected to the same pin. The user is responsible for the proper setting of the GPIO modes in order to avoid conflicts between GPIOs bonded to the same pin (including their alternate functions). For example, pull-up enabled on PD1 is also seen on PC6, PD3 and PD5. Push-pull configuration of PC3 is also seen on PC4 and PC5, etc.

5.2 Alternate function remapping

As shown in the rightmost column of the pin description table, some alternate functions can be remapped at different I/O ports by programming one of eight AFR (alternate function remap) option bits. Refer to *Section 8: Option bytes*. When the remapping option is active, the default alternate function is no longer available.

To use an alternate function, the corresponding peripheral must be enabled in the peripheral registers.

Alternate function remapping does not effect GPIO capabilities of the I/O ports (see the GPIO section of the family reference manual, RM0016).

6 Memory and register map

6.1 Memory map

Figure 4. Memory map

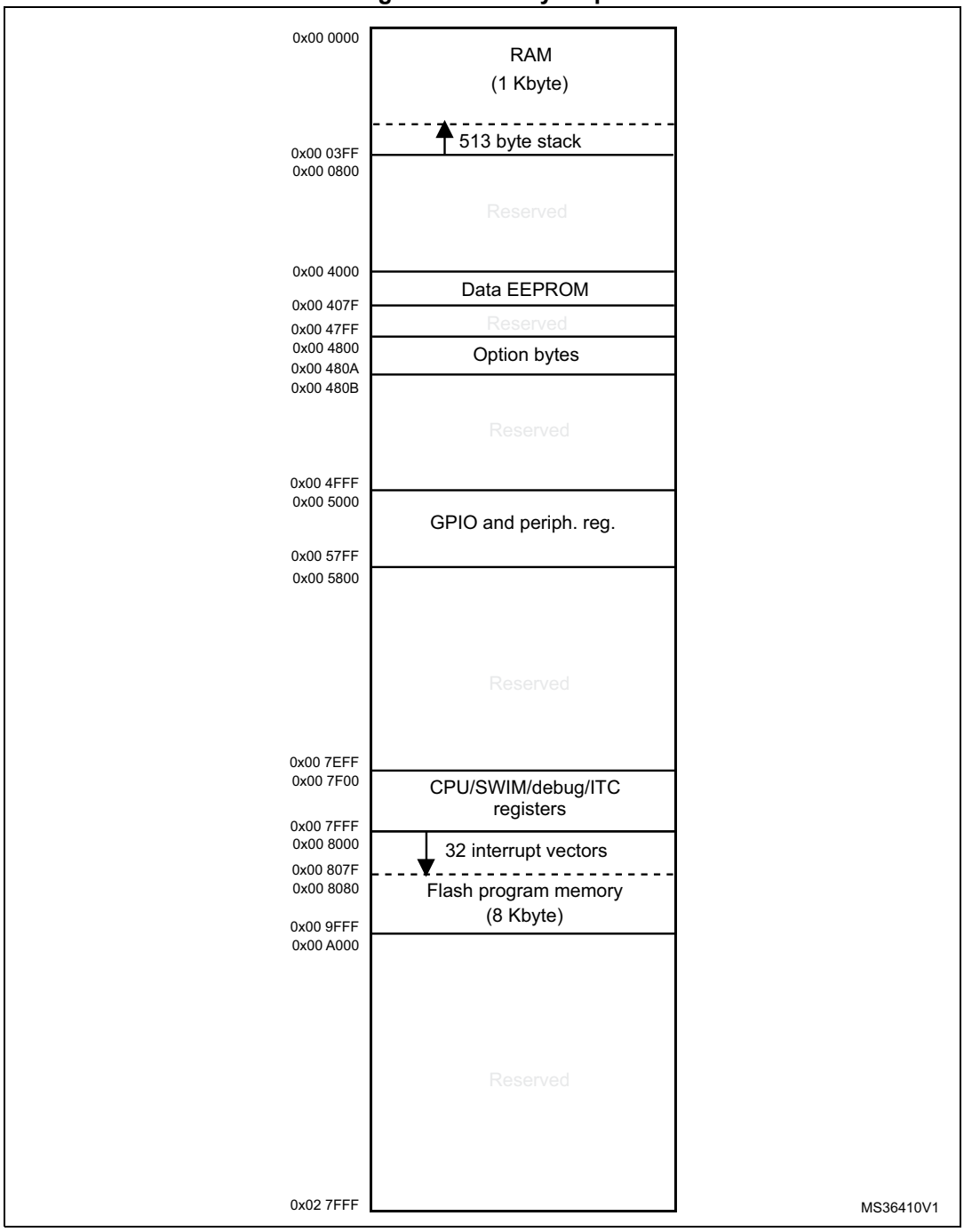

Table 6 lists the boundary addresses for each memory size. The top of the stack is at the RAM end address in each case.

Table 6. Flash, Data EEPROM and RAM boundary addresses

Memory area	Size (byte)	Start address	End address
Flash program memory	8 K	0x00 8000	0x00 9FFF
RAM	1 K	0x00 0000	0x00 03FF
Data EEPROM	128	0x00 4000	0x00 407F

6.2 Register map

6.2.1 I/O port hardware register map

Table 7. I/O port hardware register map

Address	Block	Register label	Register name	Reset status
0x00 5000	Port A	PA_ODR	Port A data output latch register	0x00
0x00 5001		PA_IDR	Port A input pin value register	0xXX(1)
0x00 5002		PA_DDR	Port A data direction register	0x00
0x00 5003		PA_CR1	Port A control register 1	0x00
0x00 5004		PA_CR2	Port A control register 2	0x00
0x00 5005	Port B	PB_ODR	Port B data output latch register	0x00
0x00 5006		PB_IDR	Port B input pin value register	0xXX(1)
0x00 5007		PB_DDR	Port B data direction register	0x00
0x00 5008		PB_CR1	Port B control register 1	0x00
0x00 5009		PB_CR2	Port B control register 2	0x00
0x00 500A	Port C	PC_ODR	Port C data output latch register	0x00
0x00 500B		PB_IDR	Port C input pin value register	0xXX(1)
0x00 500C		PC_DDR	Port C data direction register	0x00
0x00 500D		PC_CR1	Port C control register 1	0x00
0x00 500E		PC_CR2	Port C control register 2	0x00
0x00 500F	Port D	PD_ODR	Port D data output latch register	0x00
0x00 5010		PD_IDR	Port D input pin value register	0xXX(1)
0x00 5011		PD_DDR	Port D data direction register	0x00
0x00 5012		PD_CR1	Port D control register 1	0x02
0x00 5013		PD_CR2	Port D control register 2	0x00

Table 7. I/O port hardware register map (continued)

Address	Block	Register label	Register name	Reset status
0x00 5014	Port E	PE_ODR	Port E data output latch register	0x00
0x00 5015		PE_IDR	Port E input pin value register	0xXX(1)
0x00 5016		PE_DDR	Port E data direction register	0x00
0x00 5017		PE_CR1	Port E control register 1	0x00
0x00 5018		PE_CR2	Port E control register 2	0x00
0x00 5019	Port F	PF_ODR	Port F data output latch register	0x00
0x00 501A		PF_IDR	Port F input pin value register	0xXX(1)
0x00 501B		PF_DDR	Port F data direction register	0x00
0x00 501C		PF_CR1	Port F control register 1	0x00
0x00 501D		PF_CR2	Port F control register 2	0x00

1. Depends on the external circuitry.

6.2.2 General hardware register map

Table 8. General hardware register map

Address	Block	Register label	Register name	Reset status
0x00 501E to 0x00 5059	Reserved area (60 byte)			
0x00 505A	Flash	FLASH_CR1	Flash control register 1	0x00
0x00 505B		FLASH_CR2	Flash control register 2	0x00
0x00 505C		FLASH_NCR2	Flash complementary control register 2	0xFF
0x00 505D		FLASH _FPR	Flash protection register	0x00
0x00 505E		FLASH _NFPR	Flash complementary protection register	0xFF
0x00 505F		FLASH _IAPSR	Flash in-application programming status register	0x00
0x00 5060 to 0x00 5061	Reserved area (2 byte)			
0x00 5062	Flash	FLASH _PUKR	Flash Program memory unprotection register	0x00
0x00 5063	Reserved area (1 byte)			
0x00 5064	Flash	FLASH _DUKR	Data EEPROM unprotection register	0x00
0x00 5065 to 0x00 509F	Reserved area (59 byte)			
0x00 50A0	ITC	EXTI_CR1	External interrupt control register 1	0x00
0x00 50A1		EXTI_CR2	External interrupt control register 2	0x00
0x00 50A2 to 0x00 50B2	Reserved area (17 byte)			
0x00 50B3	RST	RST_SR	Reset status register	0xXX(1)
0x00 50B4 to 0x00 50BF	Reserved area (12 byte)			
0x00 50C0	CLK	CLK_ICKR	Internal clock control register	0x01
0x00 50C1		CLK_ECKR	External clock control register	0x00
0x00 50C2	Reserved area (1 byte)			
0x00 50C3	CLK	CLK_CMSR	Clock master status register	0xE1
0x00 50C4		CLK_SWR	Clock master switch register	0xE1
0x00 50C5		CLK_SWCR	Clock switch control register	0xXX
0x00 50C6		CLK_CKDIVR	Clock divider register	0x18
0x00 50C7		CLK_PCKENR1	Peripheral clock gating register 1	0xFF
0x00 50C8		CLK_CSSR	Clock security system register	0x00
0x00 50C9		CLK_CCOR	Configurable clock control register	0x00
0x00 50CA		CLK_PCKENR2	Peripheral clock gating register 2	0xFF
0x00 50CB	Reserved area (1 byte)			

Table 8. General hardware register map (continued)

Address	Block	Register label	Register name	Reset status
0x00 50CC	CLK	CLK_HSITRIMR	HSI clock calibration trimming register	0x00
0x00 50CD		CLK_SWIMCCR	SWIM clock control register	0bXXXX XXX0
0x00 50CE to 0x00 50D0	Reserved area (3 byte)			
0x00 50D1	WWDG	WWDG_CR	WWDG control register	0x7F
0x00 50D2		WWDG_WR	WWDR window register	0x7F
0x00 50D3 to 0x00 50DF	Reserved area (13 byte)			
0x00 50E0	IWDG	IWDG_KR	IWDG key register	0xXX(2)
0x00 50E1		IWDG_PR	IWDG prescaler register	0x00
0x00 50E2		IWDG_RLR	IWDG reload register	0xFF
0x00 50E3 to 0x00 50EF	Reserved area (13 byte)			
0x00 50F0	AWU	AWU_CSR1	AWU control/status register 1	0x00
0x00 50F1		AWU_APR	AWU asynchronous prescaler buffer register	0x3F
0x00 50F2		AWU_TBR	AWU timebase selection register	0x00
0x00 50F3 to 0x00 50FF	Reserved area (13 byte)			
0x00 5200	SPI	SPI_CR1	SPI control register 1	0x00
0x00 5201		SPI_CR2	SPI control register 2	0x00
0x00 5202		SPI_ICR	SPI interrupt control register	0x00
0x00 5203		SPI_SR	SPI status register	0x02
0x00 5204		SPI_DR	SPI data register	0x00
0x00 5205		SPI_CRCPR	SPI CRC polynomial register	0x07
0x00 5206		SPI_RXCRCR	SPI Rx CRC register	0x00
0x00 5207		SPI_TXCRCR	SPI Tx CRC register	0x00
0x00 5208 to 0x00 520F	Reserved area (8 byte)			
0x00 5210	I2C	I2C_CR1	I2C control register 1	0x00
0x00 5211		I2C_CR2	I2C control register 2	0x00
0x00 5212		I2C_FREQR	I2C frequency register	0x00
0x00 5213		I2C_OARL	I2C own address register low	0x00
0x00 5214		I2C_OARH	I2C own address register high	0x00
0x00 5215		Reserved		

Table 8. General hardware register map (continued)

Address	Block	Register label	Register name	Reset status
0x00 5216	I2C	I2C_DR	I2C data register	0x00
0x00 5217		I2C_SR1	I2C status register 1	0x00
0x00 5218		I2C_SR2	I2C status register 2	0x00
0x00 5219		I2C_SR3	I2C status register 3	0x00
0x00 521A		I2C_ITR	I2C interrupt control register	0x00
0x00 521B		I2C_CCRL	I2C clock control register low	0x00
0x00 521C		I2C_CCRH	I2C clock control register high	0x00
0x00 521D		I2C_TRISER	I2C TRISE register	0x02
0x00 521E		I2C_PECR	I2C packet error checking register	0x00
0x00 521F to 0x00 522F	Reserved area (17 byte)			
0x00 5230	UART1	UART1_SR	UART1 status register	0xC0
0x00 5231		UART1_DR	UART1 data register	0xXX
0x00 5232		UART1_BRR1	UART1 baud rate register 1	0x00
0x00 5233		UART1_BRR2	UART1 baud rate register 2	0x00
0x00 5234		UART1_CR1	UART1 control register 1	0x00
0x00 5235		UART1_CR2	UART1 control register 2	0x00
0x00 5236		UART1_CR3	UART1 control register 3	0x00
0x00 5237		UART1_CR4	UART1 control register 4	0x00
0x00 5238		UART1_CR5	UART1 control register 5	0x00
0x00 5239		UART1_GTR	UART1 guard time register	0x00
0x00 523A		UART1_PSCR	UART1 prescaler register	0x00
0x00 523B to 0x00 523F	Reserved area (5 bytes)			
0x00 523B to 0x00523F	Reserved area (21 byte)			

Table 8. General hardware register map (continued)

Address	Block	Register label	Register name	Reset status
0x00 5250	TIM1	TIM1_CR1	TIM1 control register 1	0x00
0x00 5251		TIM1_CR2	TIM1 control register 2	0x00
0x00 5252		TIM1_SMCR	TIM1 slave mode control register	0x00
0x00 5253		TIM1_ETR	TIM1 external trigger register	0x00
0x00 5254		TIM1_IER	TIM1 Interrupt enable register	0x00
0x00 5255		TIM1_SR1	TIM1 status register 1	0x00
0x00 5256		TIM1_SR2	TIM1 status register 2	0x00
0x00 5257		TIM1_EGR	TIM1 event generation register	0x00
0x00 5258		TIM1_CCMR1	TIM1 capture/compare mode register 1	0x00
0x00 5259		TIM1_CCMR2	TIM1 capture/compare mode register 2	0x00
0x00 525A		TIM1_CCMR3	TIM1 capture/compare mode register 3	0x00
0x00 525B		TIM1_CCMR4	TIM1 capture/compare mode register 4	0x00
0x00 525C		TIM1_CCER1	TIM1 capture/compare enable register 1	0x00
0x00 525D		TIM1_CCER2	TIM1 capture/compare enable register 2	0x00
0x00 525E		TIM1_CNTRH	TIM1 counter high	0x00
0x00 525F		TIM1_CNTRL	TIM1 counter low	0x00
0x00 5260		TIM1_PSCRH	TIM1 prescaler register high	0x00
0x00 5261		TIM1_PSCRL	TIM1 prescaler register low	0x00
0x00 5262		TIM1_ARRH	TIM1 auto-reload register high	0xFF
0x00 5263		TIM1_ARRL	TIM1 auto-reload register low	0xFF
0x00 5264		TIM1_RCR	TIM1 repetition counter register	0x00
0x00 5265		TIM1_CCR1H	TIM1 capture/compare register 1 high	0x00
0x00 5266		TIM1_CCR1L	TIM1 capture/compare register 1 low	0x00
0x00 5267		TIM1_CCR2H	TIM1 capture/compare register 2 high	0x00
0x00 5268		TIM1_CCR2L	TIM1 capture/compare register 2 low	0x00
0x00 5269		TIM1_CCR3H	TIM1 capture/compare register 3 high	0x00
0x00 526A		TIM1_CCR3L	TIM1 capture/compare register 3 low	0x00
0x00 526B		TIM1_CCR4H	TIM1 capture/compare register 4 high	0x00
0x00 526C		TIM1_CCR4L	TIM1 capture/compare register 4 low	0x00
0x00 526D		TIM1_BKR	TIM1 break register	0x00
0x00 526E		TIM1_DTR	TIM1 dead-time register	0x00
0x00 526F		TIM1_OISR	TIM1 output idle state register	0x00
0x00 5270 to 0x00 52FF	Reserved area (147 byte)			

Table 8. General hardware register map (continued)

Address	Block	Register label	Register name	Reset status
0x00 5300	TIM2	TIM2_CR1	TIM2 control register 1	0x00
0x00 5301		Reserved		
0x00 5302		Reserved		
0x00 5303		TIM2_IER	TIM2 interrupt enable register	0x00
0x00 5304		TIM2_SR1	TIM2 status register 1	0x00
0x00 5305		TIM2_SR2	TIM2 status register 2	0x00
0x00 5306		TIM2_EGR	TIM2 event generation register	0x00
0x00 5307		TIM2_CCMR1	TIM2 capture/compare mode register 1	0x00
0x00 5308		TIM2_CCMR2	TIM2 capture/compare mode register 2	0x00
0x00 5309		TIM2_CCMR3	TIM2 capture/compare mode register 3	0x00
0x00 530A		TIM2_CCER1	TIM2 capture/compare enable register 1	0x00
0x00 530B		TIM2_CCER2	TIM2 capture/compare enable register 2	0x00
0x00 530C		TIM2_CNTRH	TIM2 counter high	0x00
0x00 530D		TIM2_CNTRL	TIM2 counter low	0x00
0x00 530E		TIM2_PSCR	TIM2 prescaler register	0x00
0x00 530F		TIM2_ARRH	TIM2 auto-reload register high	0xFF
0x00 5310		TIM2_ARRL	TIM2 auto-reload register low	0xFF
0x00 5311		TIM2_CCR1H	TIM2 capture/compare register 1 high	0x00
0x00 5312		TIM2_CCR1L	TIM2 capture/compare register 1 low	0x00
0x00 5313		TIM2_CCR2H	TIM2 capture/compare reg. 2 high	0x00
0x00 5314		TIM2_CCR2L	TIM2 capture/compare register 2 low	0x00
0x00 5315		TIM2_CCR3H	TIM2 capture/compare register 3 high	0x00
0x00 5316		TIM2_CCR3L	TIM2 capture/compare register 3 low	0x00
0x00 5317 to 0x00 533F	Reserved area (43 byte)			
0x00 5340	TIM4	TIM4_CR1	TIM4 control register 1	0x00
0x00 5341		Reserved		
0x00 5342		Reserved		
0x00 5343		TIM4_IER	TIM4 interrupt enable register	0x00
0x00 5344		TIM4_SR	TIM4 status register	0x00
0x00 5345		TIM4_EGR	TIM4 event generation register	0x00
0x00 5346		TIM4_CNTR	TIM4 counter	0x00
0x00 5347		TIM4_PSCR	TIM4 prescaler register	0x00
0x00 5348		TIM4_ARR	TIM4 auto-reload register	0xFF

Table 8. General hardware register map (continued)

Address	Block	Register label	Register name	Reset status
0x00 5349 to 0x00 53DF	Reserved area (153 byte)			
0x00 53E0 to 0x00 53F3	ADC1	ADC_DBxR	ADC data buffer registers	0x00
0x00 53F4 to 0x00 53FF	Reserved area (12 byte)			
0x00 5400	ADC1	ADC _CSR	ADC control/status register	0x00
0x00 5401		ADC_CR1	ADC configuration register 1	0x00
0x00 5402		ADC_CR2	ADC configuration register 2	0x00
0x00 5403		ADC_CR3	ADC configuration register 3	0x00
0x00 5404		ADC_DRH	ADC data register high	0xXX
0x00 5405		ADC_DRL	ADC data register low	0xXX
0x00 5406		ADC_TDRH	ADC Schmitt trigger disable register high	0x00
0x00 5407		ADC_TDRL	ADC Schmitt trigger disable register low	0x00
0x00 5408		ADC_HTRH	ADC high threshold register high	0x03
0x00 5409		ADC_HTRL	ADC high threshold register low	0xFF
0x00 540A		ADC_LTRH	ADC low threshold register high	0x00
0x00 540B		ADC_LTRL	ADC low threshold register low	0x00
0x00 540C		ADC_AWSRH	ADC analog watchdog status register high	0x00
0x00 540D		ADC_AWSRL	ADC analog watchdog status register low	0x00
0x00 540E		ADC_AWCRH	ADC analog watchdog control register high	0x00
0x00 540F		ADC_AWCRL	ADC analog watchdog control register low	0x00
0x00 5410 to 0x00 57FF	Reserved area (1008 byte)			

1. Depends on the previous reset source.
2. Write only register.

6.2.3 CPU/SWIM/debug module/interrupt controller registers

Table 9. CPU/SWIM/debug module/interrupt controller registers

Address	Block	Register Label	Register Name	Reset Status
0x00 7F00	CPU(1)	A	Accumulator	0x00
0x00 7F01		PCE	Program counter extended	0x00
0x00 7F02		PCH	Program counter high	0x00
0x00 7F03		PCL	Program counter low	0x00
0x00 7F04		XH	X index register high	0x00
0x00 7F05		XL	X index register low	0x00
0x00 7F06		YH	Y index register high	0x00
0x00 7F07		YL	Y index register low	0x00
0x00 7F08		SPH	Stack pointer high	0x
0x00 7F09		SPL	Stack pointer low	0xFF
0x00 7F0A		CCR	Condition code register	0x28
0x00 7F0B to 0x00 7F5F	Reserved area (85 byte)			
0x00 7F60	CPU	CFG_GCR	Global configuration register	0x00
0x00 7F70	ITC	ITC_SPR1	Interrupt software priority register 1	0xFF
0x00 7F71		ITC_SPR2	Interrupt software priority register 2	0xFF
0x00 7F72		ITC_SPR3	Interrupt software priority register 3	0xFF
0x00 7F73		ITC_SPR4	Interrupt software priority register 4	0xFF
0x00 7F74		ITC_SPR5	Interrupt software priority register 5	0xFF
0x00 7F75		ITC_SPR6	Interrupt software priority register 6	0xFF
0x00 7F76		ITC_SPR7	Interrupt software priority register 7	0xFF
0x00 7F77		ITC_SPR8	Interrupt software priority register 8	0xFF
0x00 7F78 to 0x00 7F79	Reserved area (2 byte)			
0x00 7F80	SWIM	SWIM_CSR	SWIM control status register	0x00
0x00 7F81 to 0x00 7F8F	Reserved area (15 byte)			

Table 9. CPU/SWIM/debug module/interrupt controller registers (continued)

Address	Block	Register Label	Register Name	Reset Status
0x00 7F90	DM	DM_BK1RE	DM breakpoint 1 register extended byte	0xFF
0x00 7F91		DM_BK1RH	DM breakpoint 1 register high byte	0xFF
0x00 7F92		DM_BK1RL	DM breakpoint 1 register low byte	0xFF
0x00 7F93		DM_BK2RE	DM breakpoint 2 register extended byte	0xFF
0x00 7F94		DM_BK2RH	DM breakpoint 2 register high byte	0xFF
0x00 7F95		DM_BK2RL	DM breakpoint 2 register low byte	0xFF
0x00 7F96		DM_CR1	DM debug module control register 1	0x00
0x00 7F97		DM_CR2	DM debug module control register 2	0x00
0x00 7F98		DM_CSR1	DM debug module control/status register 1	0x10
0x00 7F99		DM_CSR2	DM debug module control/status register 2	0x00
0x00 7F9A		DM_ENFCTR	DM enable function register	0xFF
0x00 7F9B to 0x00 7F9F	Reserved area (5 byte)			

1. Accessible by debug module only

7 Interrupt vector mapping

Table 10. Interrupt mapping

IRQ no.	Source block	Description	Wakeup from Halt mode	Wakeup from Active-halt mode	Vector address
-	RESET	Reset	Yes	Yes	0x00 8000
-	TRAP	Software interrupt	-	-	0x00 8004
0	TLI	External top level interrupt	-	-	0x00 8008
1	AWU	Auto wake up from halt	-	Yes	0x00 800C
2	CLK	Clock controller	-	-	0x00 8010
3	EXTI0	Port A external interrupts	Yes(1)	Yes(1)	0x00 8014
4	EXTI1	Port B external interrupts	Yes	Yes	0x00 8018
5	EXTI2	Port C external interrupts	Yes	Yes	0x00 801C
6	EXTI3	Port D external interrupts	Yes	Yes	0x00 8020
7	EXTI4	Port E external interrupts	Yes	Yes	0x00 8024
8	-	Reserved			0x00 8028
9	-	Reserved			0x00 802C
10	SPI	End of transfer	Yes	Yes	0x00 8030
11	TIM1	TIM1 update/overflow/underflow/ trigger/break	-	-	0x00 8034
12	TIM1	TIM1 capture/compare	-	-	0x00 8038
13	TIM2	TIM2 update /overflow	-	-	0x00 803C
14	TIM2	TIM2 capture/compare	-	-	0x00 8040
15	-	Reserved			0x00 8044
16	-	Reserved			0x00 8048
17	UART1	Tx complete	-	-	0x00 804C
18	UART1	Receive register DATA FULL	-	-	0x00 8050
19	I2C	I2C interrupt	Yes	Yes	0x00 8054
20	-	Reserved			0x00 8058
21	-	Reserved			0x00 805C
22	ADC1	ADC1 end of conversion/analog watchdog interrupt	-	-	0x00 8060
23	TIM4	TIM4 update/overflow	-	-	0x00 8064
24	Flash	EOP/WR_PG_DIS	-	-	0x00 8068
Reserved					0x00 806C to 0x00 807C

1. Except PA1

8 Option bytes

Option bytes contain configurations for device hardware features as well as the memory protection of the device. They are stored in a dedicated block of the memory. Except for the ROP (read-out protection) byte, each option byte has to be stored twice, in a regular form (OPTx) and a complemented one (NOPTx) for redundancy.

Option bytes can be modified in ICP mode (via SWIM) by accessing the EEPROM address shown in *Table 11: Option bytes* below. Option bytes can also be modified 'on the fly' by the application in IAP mode, except the ROP option that can only be modified in ICP mode (via SWIM).

Refer to the STM8S Flash programming manual (PM0051) and STM8 SWIM communication protocol and debug module user manual (UM0470) for information on SWIM programming procedures.

Table 11. Option bytes

Addr.	Option name	Option byte no.	Option bits								Factory default setting
			7	6	5	4	3	2	1	0	
0x4800	Read-out protection (ROP)	OPT0	ROP[7:0]								0x00
0x4801	User boot code (UBC)	OPT1	UBC[7:0]								0x00
0x4802		NOPT1	NUBC[7:0]								0xFF
0x4803	Alternate function remapping (AFR)	OPT2	AFR7	AFR6	AFR5	AFR4	AFR3	AFR2	AFR1	AFR0	0x00
0x4804		NOPT2	NAFR7	NAFR6	NAFR5	NAFR4	NAFR3	NAFR2	NAFR1	NAFR0	0xFF
0x4805	Misc. option	OPT3	Reserved			HSITRIM	LSI _EN	IWDG _HW	WWDG _HW	WWDG _HALT	0x00
0x4806		NOPT3	Reserved			NHSI TRIM	NLSI _EN	NIWDG _HW	NWWDG _HW	NWWDG _HALT	0xFF
0x4807	Clock option	OPT4	Reserved				EXT CLK	CKAWU SEL	PRS C1	PRS C0	0x00
0x4808		NOPT4	Reserved				NEXT CLK	NCKAW USEL	NPR SC1	NPR SC0	0xFF
0x4809	HSE clock startup	OPT5	HSECNT[7:0]								0x00
0x480A		NOPT5	NHSECNT[7:0]								0xFF

Table 12. Option byte description

Option byte no.	Description
OPT0	**ROP[7:0]** *Memory readout protection (ROP)* 0xAA: Enable readout protection (write access via SWIM protocol) *Note: Refer to the family reference manual (RM0016) section on Flash/EEPROM memory readout protection for details.*

Table 12. Option byte description (continued)

Option byte no.	Description
OPT1	**UBC[7:0]** *User boot code area* 0x00: no UBC, no write-protection 0x01: Pages 0 defined as UBC, memory write-protected 0x02: Pages 0 to 1 defined as UBC, memory write-protected Page 0 and page 1 contain the interrupt vectors. ... 0x7F: Pages 0 to 126 defined as UBC, memory write-protected Other values: Pages 0 to 127 defined as UBC, memory-write protected. *Note: Refer to the family reference manual (RM0016) section on Flash/EEPROM write protection for more details.*
OPT2	**AFR[7:0]** Refer to the following section for alternate function remapping descriptions of bits [7:2] and [1:0] respectively.
OPT3	**HSITRIM**: high-speed internal clock trimming register size 0: 3-bit trimming supported in CLK_HSITRIMR register 1: 4-bit trimming supported in CLK_HSITRIMR register
	LSI_EN: *Low speed internal clock enable* 0: LSI clock is not available as CPU clock source 1: LSI clock is available as CPU clock source
	IWDG_HW: *Independent watchdog* 0: IWDG Independent watchdog activated by software 1: IWDG Independent watchdog activated by hardware
	WWDG_HW: *Window watchdog activation* 0: WWDG window watchdog activated by software 1: WWDG window watchdog activated by hardware
	WWDG_HALT: *Window watchdog reset on halt* 0: No reset generated on halt if WWDG active 1: Reset generated on halt if WWDG active
OPT4	**EXTCLK:** *External clock selection* 0: External crystal connected to OSCIN/OSCOUT 1: External clock signal on OSCIN
	CKAWUSEL: *Auto wakeup unit/clock* 0: LSI clock source selected for AWU 1: HSE clock with prescaler selected as clock source for for AWU
	PRSC[1:0] AWU clock prescaler 0x: 16 MHz to 128 kHz prescaler 10: 8 MHz to 128 kHz prescaler 11: 4 MHz to 128 kHz prescaler
OPT5	**HSECNT[7:0]:** *HSE crystal oscillator stabilization time* This configures the stabilization time. 0x00: 2048 HSE cycles 0xB4: 128 HSE cycles 0xD2: 8 HSE cycles 0xE1: 0.5 HSE cycles

8.1 Alternate function remapping bits

Table 13. STM8S001J3 alternate function remapping bits for 8-pin devices

Option byte number	Description
OPT2	**AFR7***Alternate function remapping option 7* 0: AFR7 remapping option inactive: default alternate function(1) 1: Port C3 alternate function = TIM1_CH1N; port C4 alternate function = TIM1_CH2N. **AFR6** *Alternate function remapping option 6* Reserved. **AFR5** *Alternate function remapping option 5* Reserved. **AFR4** *Alternate function remapping option 4* 0: AFR4 remapping option inactive: default alternate function(1). 1: Port B4 alternate function = ADC_ETR; port B5 alternate function = TIM1_BKIN. **AFR3** *Alternate function remapping option 3* 0: AFR3 remapping option inactive: default alternate function(1) 1: Port C3 alternate function = TLI. **AFR2** *Alternate function remapping option 2* 0: AFR2 remapping option inactive: default alternate function(1) 1: Port C4 alternate function = AIN2. **AFR1** *Alternate function remapping option 1* (2) 0: AFR1 remapping option inactive: default alternate function(1) 1: If AFR0=0: Port A3 alternate function = SPI_NSS. If AFR0=1: Port A3 alternate function = UART_TX; port D6 alternate function UART_RX unavailable. **AFR0** *Alternate function remapping option 0*(2) 0: AFR0 remapping option inactive: Default alternate functions(1) 1: Port C5 alternate function = TIM2_CH1; port C6 alternate function = TIM1_CH1.

1. Refer to the pinout description.
2. Do not use more than one remapping option in the same port.

9 Electrical characteristics

9.1 Parameter conditions

Unless otherwise specified, all voltages are referred to V_{SS}.

9.1.1 Minimum and maximum values

Unless otherwise specified the minimum and maximum values are guaranteed in the worst conditions of ambient temperature, supply voltage and frequencies by tests in production on 100% of the devices with an ambient temperature at T_A = 25 °C and $T_A = T_{Amax}$ (given by the selected temperature range).

Data based on characterization results, design simulation and/or technology characteristics are indicated in the table footnotes and are not tested in production. Based on characterization, the minimum and maximum values refer to sample tests and represent the mean value plus or minus three times the standard deviation (mean ± 3 Σ).

9.1.2 Typical values

Unless otherwise specified, typical data are based on T_A = 25 °C, V_{DD} = 5 V. They are given only as design guidelines and are not tested.

Typical ADC accuracy values are determined by characterization of a batch of samples from a standard diffusion lot over the full temperature range, where 95% of the devices have an error less than or equal to the value indicated (mean ± 2 Σ).

9.1.3 Typical curves

Unless otherwise specified, all typical curves are given only as design guidelines and are not tested.

9.1.4 Loading capacitor

The loading conditions used for pin parameter measurement are shown in *Figure 5*.

Figure 5. Pin loading conditions

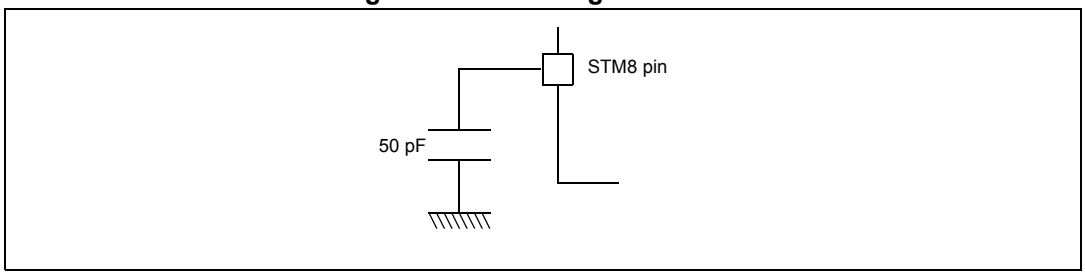

9.1.5 Pin input voltage

The input voltage measurement on a pin of the device is described in *Figure 6*.

Figure 6. Pin input voltage

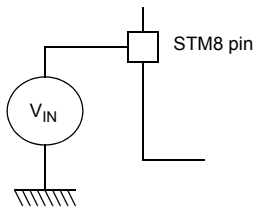

9.2 Absolute maximum ratings

Stresses above the absolute maximum ratings listed in *Table 14: Voltage characteristics*, *Table 15: Current characteristics*, and *Table 16: Thermal characteristics* may cause permanent damage to the device. These are stress ratings only and functional operation of the device at these conditions is not implied. Exposure to maximum rating conditions for extended periods may affect device reliability.

Device mission profile (application conditions) is compliant with JEDEC JESD47 Qualification Standard, extended mission profiles are available on demand.

Table 14. Voltage characteristics

Symbol	Ratings	Min	Max	Unit
$V_{DDx} - V_{SS}$	Supply voltage(1)	-0.3	6.5	V
V_{IN}	Input voltage on true open drain pins(2)	V_{SS} - 0.3	6.5	
	Input voltage on any other pin(2)	V_{SS} - 0.3	V_{DD} + 0.3	
V_{ESD}	Electrostatic discharge voltage	see *Absolute maximum ratings (electrical sensitivity) on page 75*		-

1. All power (V_{DD}) and ground (V_{SS}) pins must always be connected to the external power supply
2. $I_{INJ(PIN)}$ must never be exceeded. This is implicitly insured if V_{IN} maximum is respected. If V_{IN} maximum cannot be respected, the injection current must be limited externally to the $I_{INJ(PIN)}$ value. A positive injection is induced by $V_{IN}>V_{DD}$ while a negative injection is induced by $V_{IN}<V_{SS}$. For true open-drain pads, there is no positive injection current, and the corresponding V_{IN} maximum must always be respected

Table 15. Current characteristics

Symbol	Ratings	Max.(1)	Unit
I_{VDD}	Total current into V_{DD} power lines (source)(2)	100	mA
I_{VSS}	Total current out of V_{SS} ground lines (sink)(2)	80	
I_{IO}	Output current sunk by any I/O and control pin	20	
	Output current source by any I/Os and control pin	-20	
$I_{INJ(PIN)}$(3)(4)	Injected current on OSCIN pin	±4	
	Injected current on any other pin(5)	±4	
$\Sigma I_{INJ(PIN)}$(3)	Total injected current (sum of all I/O and control pins)(5)	±20	

1. Guaranteed by characterization results.
2. All power (V_{DD}) and ground (V_{SS}) pins must always be connected to the external supply.
3. $I_{INJ(PIN)}$ must never be exceeded. This is implicitly insured if V_{IN} maximum is respected. If V_{IN} maximum cannot be respected, the injection current must be limited externally to the $I_{INJ(PIN)}$ value. A positive injection is induced by $V_{IN}>V_{DD}$ while a negative injection is induced by $V_{IN}<V_{SS}$. For true open-drain pads, there is no positive injection current, and the corresponding V_{IN} maximum must always be respected
4. ADC accuracy vs. negative injection current: Injecting negative current on any of the analog input pins should be avoided as this significantly reduces the accuracy of the conversion being performed on another analog input. It is recommended to add a Schottky diode (pin to ground) to standard analog pins which may potentially inject negative current. Any positive injection current within the limits specified for $I_{INJ(PIN)}$ and $\Sigma I_{INJ(PIN)}$ in the I/O port pin characteristics section does not affect the ADC accuracy.
5. When several inputs are submitted to a current injection, the maximum $\Sigma I_{INJ(PIN)}$ is the absolute sum of the positive and negative injected currents (instantaneous values). These results are based on characterization with $\Sigma I_{INJ(PIN)}$ maximum current injection on four I/O port pins of the device.

Table 16. Thermal characteristics

Symbol	Ratings	Value	Unit
T_{STG}	Storage temperature range	-65 to 150	°C
T_J	Maximum junction temperature	150	

9.3 Operating conditions

The device must be used in operating conditions that respect the parameters in *Table 17*. In addition, full account must be taken of all physical capacitor characteristics and tolerances.

Table 17. General operating conditions

Symbol	Parameter	Conditions	Min	Max	Unit
f_{CPU}	Internal CPU clock frequency	-	0	16	MHz
V_{DD}	Standard operating voltage	-	2.95	5.5	V
V_{CAP}(1)	C_{EXT}: capacitance of external capacitor	-	470	3300	nF
	ESR of external capacitor	At 1 MHz(2)	-	0.3	ohm
	ESL of external capacitor		-	15	nH
P_D(3)	Power dissipation at T_A = 125° C	SO8N	-	49	mW
T_A	Ambient temperature	Maximum power dissipation	-40	125	°C
T_J	Junction temperature range	-	-40	130	

1. Care should be taken when selecting the capacitor, due to its tolerance, as well as the parameter dependency on temperature, DC bias and frequency in addition to other factors. The parameter must be respected for the full application range.
2. This frequency of 1 MHz as a condition for V_{CAP} parameters is given by the design of the internal regulator.
3. To calculate $P_{Dmax}(T_A)$, use the formula $P_{Dmax} = (T_{Jmax} - T_A)/\Theta_{JA}$ (see *Section 10.2: Thermal characteristics on page 79*) with the value for T_{Jmax} given in *Table 17* above and the value for Θ_{JA} given in *Table 49: Thermal characteristics*.

Figure 7. f_{CPUmax} versus V_{DD}

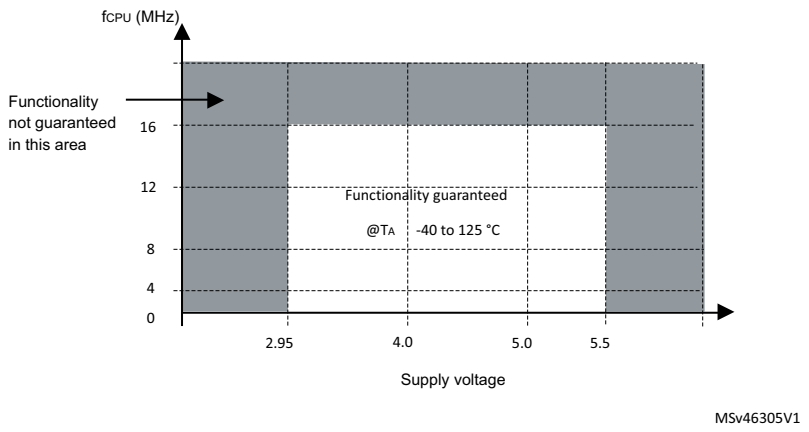

Table 18. Operating conditions at power-up/power-down

Symbol	Parameter	Conditions	Min	Typ	Max	Unit
t_{VDD}	V_{DD} rise time rate	-	2	-	∞	µs/V
	V_{DD} fall time rate(1)	-	2	-	∞	
t_{TEMP}	Reset release delay	V_{DD} rising	-	-	1.7	ms
V_{IT+}	Power-on reset threshold	-	2.6	2.7	2.85	V
V_{IT-}	Brown-out reset threshold	-	2.5	2.65	2.8	V
$V_{HYS(BOR)}$	Brown-out reset hysteresis	-	-	70	-	mV

1. Reset is always generated after a t_{TEMP} delay. The application must ensure that V_{DD} is still above the minimum operating voltage (V_{DD} min) when the t_{TEMP} delay has elapsed.

9.3.1 VCAP external capacitor

Stabilization for the main regulator is achieved connecting an external capacitor C_{EXT} to the V_{CAP} pin. C_{EXT} is specified in *Table 17*. Care should be taken to limit the series inductance to less than 15 nH.

Figure 8. External capacitor C_{EXT}

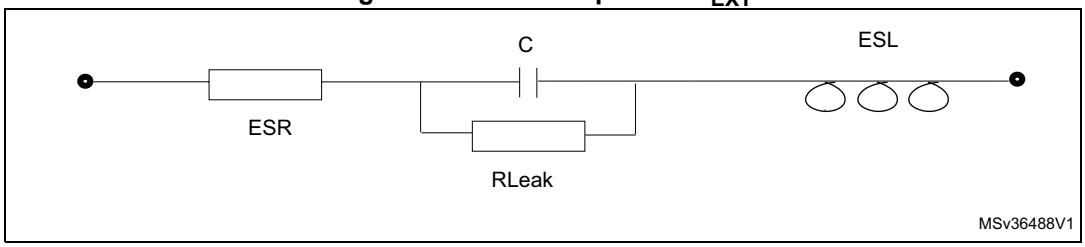

1. Legend: ESR is the equivalent series resistance and ESL is the equivalent inductance.

9.3.2 Supply current characteristics

The current consumption is measured as described in *Section 9.1.5: Pin input voltage*.

Total current consumption in run mode

The MCU is placed under the following conditions:

- All I/O pins in input mode with a static value at V_{DD} or V_{SS} (no load)
- All peripherals are disabled (clock stopped by Peripheral Clock Gating registers) except if explicitly mentioned.

Subject to general operating conditions for V_{DD} and T_A.

Table 19. Total current consumption with code execution in run mode at V_{DD} = 5 V

Symbol	Parameter	Conditions		Typ	Max (1)	Unit
$I_{DD(RUN)}$	Supply current in run mode, code executed from RAM	$f_{CPU} = f_{MASTER}$ = 16 MHz	HSE user ext. clock (16 MHz)	2	2.35	mA
			HSI RC osc. (16 MHz)	1.7	2	
		$f_{CPU} = f_{MASTER}/128$ = 125 kHz	HSE user ext. clock (16 MHz)	0.86	-	
			HSI RC osc. (16 MHz)	0.7	0.87	
		$f_{CPU} = f_{MASTER}/128$ = 15.625 kHz	HSI RC osc. (16 MHz/8)	0.46	0.58	
		$f_{CPU} = f_{MASTER}$ = 128 kHz	LSI RC osc. (128 kHz)	0.41	0.55	
	Supply current in run mode, code executed from Flash	$f_{CPU} = f_{MASTER}$ = 16 MHz	HSE user ext. clock (16 MHz)	4.3	4.75	
			HSI RC osc.(16 MHz)	3.7	4.5	
		$f_{CPU} = f_{MASTER}$ = 2 MHz	HSI RC osc. (16 MHz/8)(2)	0.84	1.05	
		$f_{CPU} = f_{MASTER}/128$ = 125 kHz	HSI RC osc. (16 MHz)	0.72	0.9	
		$f_{CPU} = f_{MASTER}/128$ = 15.625 kHz	HSI RC osc. (16 MHz/8)	0.46	0.58	
		$f_{CPU} = f_{MASTER}$ = 128 kHz	LSI RC osc. (128 kHz)	0.42	0.57	

1. Guaranteed by characterization results.

2. Default clock configuration measured with all peripherals off.

Table 20. Total current consumption with code execution in run mode at V_{DD} = 3.3 V

Symbol	Parameter	Conditions		Typ	Max(1)	Unit
$I_{DD(RUN)}$	Supply current in run mode, code executed from RAM	$f_{CPU} = f_{MASTER}$ = 16 MHz	HSE user ext. clock (16 MHz)	2	2.3	mA
			HSI RC osc. (16 MHz)	1.5	2	
		$f_{CPU} = f_{MASTER}/128$ = 125 kHz	HSE user ext. clock (16 MHz)	0.81	-	
			HSI RC osc. (16 MHz)	0.7	0.87	
		$f_{CPU} = f_{MASTER}/128$ = 15.625 kHz	HSI RC osc. (16MHz/8)	0.46	0.58	
		$f_{CPU} = f_{MASTER}$ = 128 kHz	LSI RC osc. (128 kHz)	0.41	0.55	
	Supply current in run mode, code executed from Flash	$f_{CPU} = f_{MASTER}$ = 16 MHz	HSE user ext. clock (16 MHz)	3.9	4.7	
			HSI RC osc. (16 MHz)	3.7	4.5	
		$f_{CPU} = f_{MASTER}$ = 2 MHz	HSI RC osc. (16 MHz/8)(2)	0.84	1.05	
		$f_{CPU} = f_{MASTER}/128$ = 125 kHz	HSI RC osc. (16 MHz)	0.72	0.9	
		$f_{CPU} = f_{MASTER}/128$ = 15.625 kHz	HSI RC osc. (16 MHz/8)	0.46	0.58	
		$f_{CPU} = f_{MASTER}$ = 128 kHz	LSI RC osc. (128 kHz)	0.42	0.57	

1. Guaranteed by characterization results.
2. Default clock configuration, measured with all peripherals off.

Total current consumption in wait mode

Table 21. Total current consumption in wait mode at V_{DD} = 5 V

Symbol	Parameter	Conditions		Typ	Max(1)	Unit
$I_{DD(WFI)}$	Supply current in wait mode	$f_{CPU} = f_{MASTER}$ = 16 MHz	HSE user ext. clock (16 MHz)	1.1	1.3	mA
			HSI RC osc. (16 MHz)	0.89	1.1	
		$f_{CPU} = f_{MASTER}/128$ = 125 kHz	HSI RC osc. (16 MHz)	0.7	0.88	
		$f_{CPU} = f_{MASTER}/128$ = 15.625 kHz	HSI RC osc. (16 MHz/8)(2)	0.45	0.57	
		$f_{CPU} = f_{MASTER}$ = 128 kHz	LSI RC osc. (128 kHz)	0.4	0.54	

1. Guaranteed by characterization results.
2. Default clock configuration measured with all peripherals off.

Table 22. Total current consumption in wait mode at V_{DD} = 3.3 V

Symbol	Parameter	Conditions		Typ	Max(1)	Unit
$I_{DD(WFI)}$	Supply current in wait mode	$f_{CPU} = f_{MASTER}$ = 16 MHz	HSE user ext. clock (16 MHz)	1.1	1.3	mA
			HSI RC osc. (16 MHz)	0.89	1.1	
		$f_{CPU} = f_{MASTER}/128$ = 125 kHz	HSI RC osc. (16 MHz)	0.7	0.88	
		$f_{CPU} = f_{MASTER}/128$ = 15.625 kHz	HSI RC osc. (16 MHz/8)(2)	0.45	0.57	
		$f_{CPU} = f_{MASTER}/128$ = 15.625 kHz	LSI RC osc. (128 kHz)	0.4	0.54	

1. Guaranteed by characterization results.
2. Default clock configuration measured with all peripherals off.

Total current consumption in active halt mode

Table 23. Total current consumption in active halt mode at V_{DD} = 5 V

Symbol	Parameter	Conditions			Typ	Max at 85°C(1)	Max at 125°C (1)	Unit
		Main voltage regulator (MVR)(2)	Flash mode(3)	Clock source				
$I_{DD(AH)}$	Supply current in active halt mode	On	Operating mode	HSE user external clock (16 MHz)	1030	-	-	µA
				LSI RC oscillator (128 kHz)	200	260	300	
			Power-down mode	HSE user external clock (16 MHz)	970	-	-	
				LSI RC oscillator (128 kHz)	150	200	230	
		Off	Operating mode	LSI RC oscillator (128 kHz)	66	85	110	
			Power-down mode		10	20	40	

1. Guaranteed by characterization results.
2. Configured by the REGAH bit in the CLK_ICKR register.
3. Configured by the AHALT bit in the FLASH_CR1 register.

Table 24. Total current consumption in active halt mode at V_{DD} = 3.3 V

Symbol	Parameter	Conditions			Typ	Max at 85° C(1)	Max at 125° C(1)	Unit
		Main voltage regulator (MVR)(2)	Flash mode(3)	Clock source				
$I_{DD(AH)}$	Supply current in active halt mode	On	Operating mode	HSE user external clock (16 MHz)	550	-	-	µA
				LSI RC osc. (128 kHz)	200	260	290	
			Power-down mode	HSE user external clock(16 MHz)	970	-	-	
				LSI RC osc. (128 kHz)	150	200	230	
		Off	Operating mode	LSI RC osc. (128 kHz)	66	80	105	
			Power-down mode		10	18	35	

1. Guaranteed by characterization results.
2. Configured by the REGAH bit in the CLK_ICKR register.
3. Configured by the AHALT bit in the FLASH_CR1 register.

Total current consumption in halt mode

Table 25. Total current consumption in halt mode at V_{DD} = 5 V

Symbol	Parameter	Conditions	Typ	Max at 85°C(1)	Max at 125°C(1)	Unit
$I_{DD(H)}$	Supply current in halt mode	Flash in operating mode, HSI clock after wakeup	63	75	105	µA
		Flash in power-down mode, HSI clock after wakeup	6.0	20	55	

1. Guaranteed by characterization results.

Table 26. Total current consumption in halt mode at V_{DD} = 3.3 V

Symbol	Parameter	Conditions	Typ	Max at 85° C(1)	Max at 125° C(1)	Unit
$I_{DD(H)}$	Supply current in halt mode	Flash in operating mode, HSI clock after wakeup	60	75	100	µA
		Flash in power-down mode, HSI clock after wakeup	4.5	17	30	

1. Guaranteed by characterization results.

Low-power mode wakeup times

Table 27. Wakeup times

Symbol	Parameter	Conditions			Typ	Max(1)	Unit
$t_{WU(WFI)}$	Wakeup time from wait mode to run mode(3)	0 to 16 MHz			-	-(2)	µs
		$f_{CPU} = f_{MASTER}$ = 16 MHz.			0.56	-	
$t_{WU(AH)}$	Wakeup time active halt mode to run mode.(3)	MVR voltage regulator on(4)	Flash in operating mode(5)	HSI (after wakeup)	1(6)	2(6)	
			Flash in power-down mode(5)		3(6)	-	
		MVR voltage regulator off(4)	Flash in operating mode(5)		48(6)	-	
			Flash in power-down mode(5)		50(6)	-	
$t_{WU(H)}$	Wakeup time from halt mode to run mode(3)	Flash in operating mode(5)			52	-	
		Flash in power-down mode(5)			54	-	

1. Guaranteed by design.
2. $t_{WU(WFI)} = 2 \times 1/f_{master} + 7 \times 1/f_{CPU}$
3. Measured from interrupt event to interrupt vector fetch.
4. Configured by the REGAH bit in the CLK_ICKR register.
5. Configured by the AHALT bit in the FLASH_CR1 register.
6. Plus 1 LSI clock depending on synchronization.

Total current consumption and timing in forced reset state

Table 28. Total current consumption and timing in forced reset state

Symbol	Parameter	Conditions	Typ	Max(1)	Unit
$I_{DD(R)}$	Supply current in reset state (2)	V_{DD} = 5 V	400	-	µA
		V_{DD} = 3.3 V	300	-	
$t_{RESETBL}$	Reset release to vector fetch	-	-	150	µs

1. Guaranteed by design.
2. Characterized with all I/Os tied to V_{SS}.

Current consumption of on-chip peripherals

Subject to general operating conditions for V_{DD} and T_A.

HSI internal RC/f_{CPU} = f_{MASTER} = 16 MHz, VDD = 5 V.

Table 29. Peripheral current consumption

Symbol	Parameter	Typ.	Unit
$I_{DD(TIM1)}$	TIM1 supply current (1)	210	µA
$I_{DD(TIM2)}$	TIM2 supply current (1)	130	
$I_{DD(TIM4)}$	TIM4 timer supply current (1)	50	
$I_{DD(UART1)}$	UART1 supply current(1)	120	
$I_{DD(SPI)}$	SPI supply current(1)	45	
$I_{DD(I2C)}$	I2C supply current (1)	65	
$I_{DD(ADC1)}$	ADC1 supply current when converting(1)	1000	

1. Data based on a differential I_{DD} measurement between reset configuration and timer counter running at 16 MHz. No IC/OC programmed (no I/O pads toggling). Not tested in production.

Current consumption curves

The following figures show the typical current consumption measured with code executing in RAM.

Figure 9. Typ. $I_{DD(RUN)}$ vs V_{DD}, HSE user external clock, f_{CPU} = 16 MHz

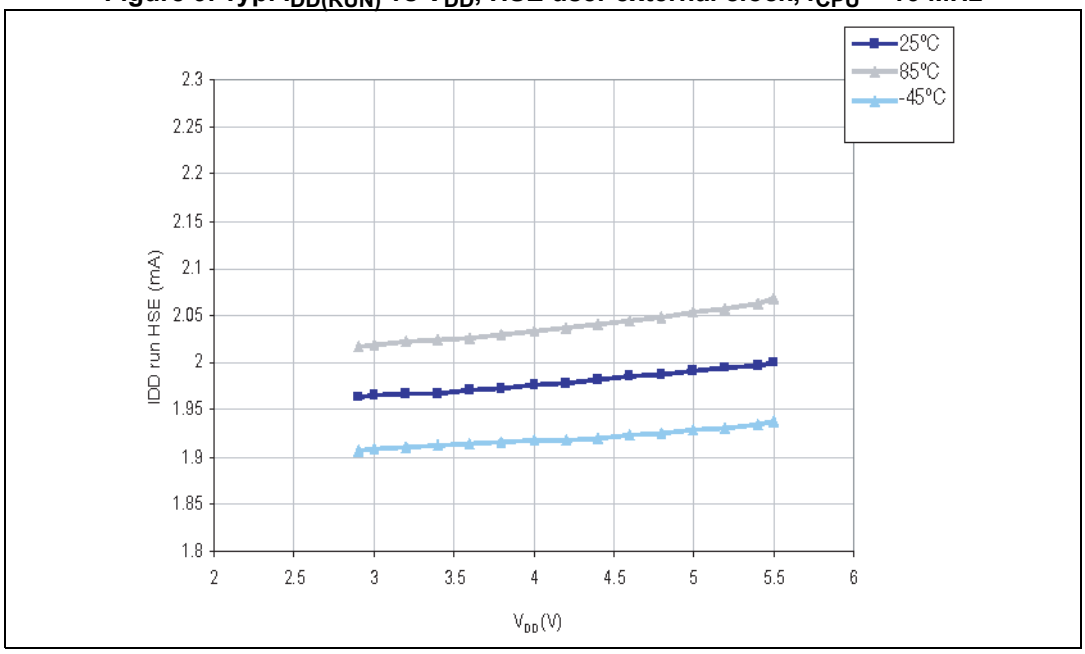

Figure 10. Typ. $I_{DD(RUN)}$ vs f_{CPU}, HSE user external clock, V_{DD} = 5 V

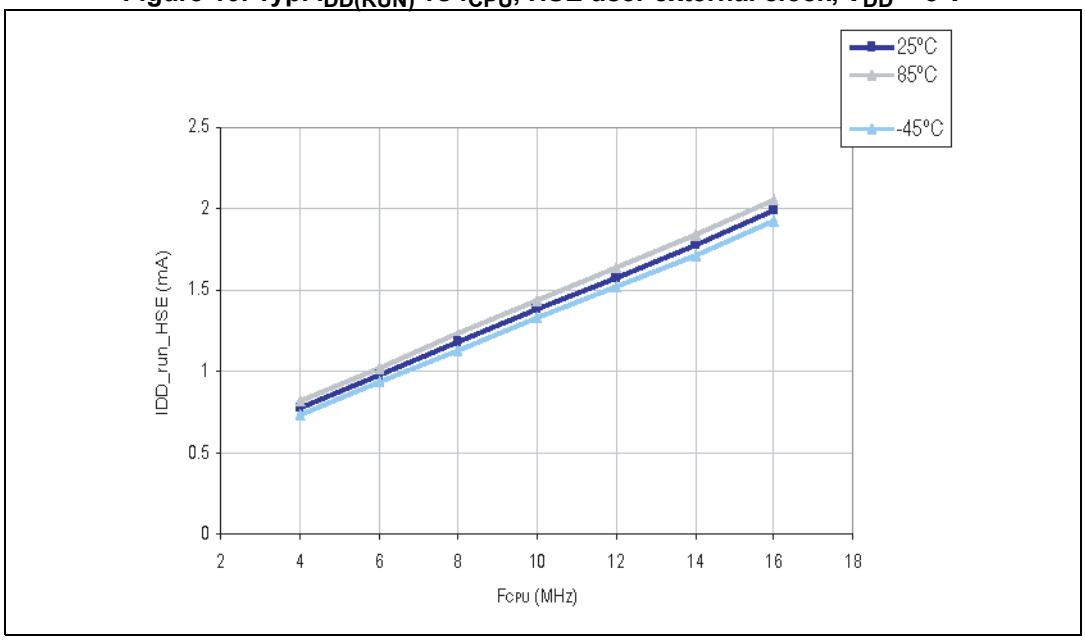

Figure 11. Typ. $I_{DD(RUN)}$ vs V_{DD}, HSI RC osc, f_{CPU} = 16 MHz

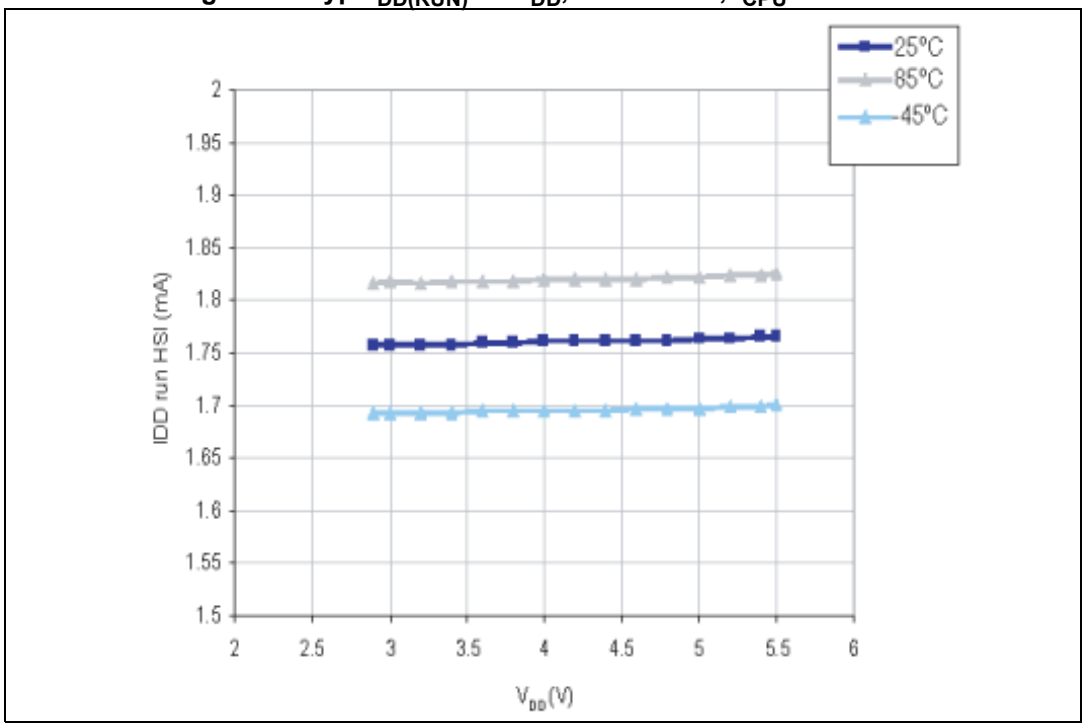

Figure 12. Typ. $I_{DD(WFI)}$ vs. V_{DD} HSE user external clock, f_{CPU} = 16 MHz

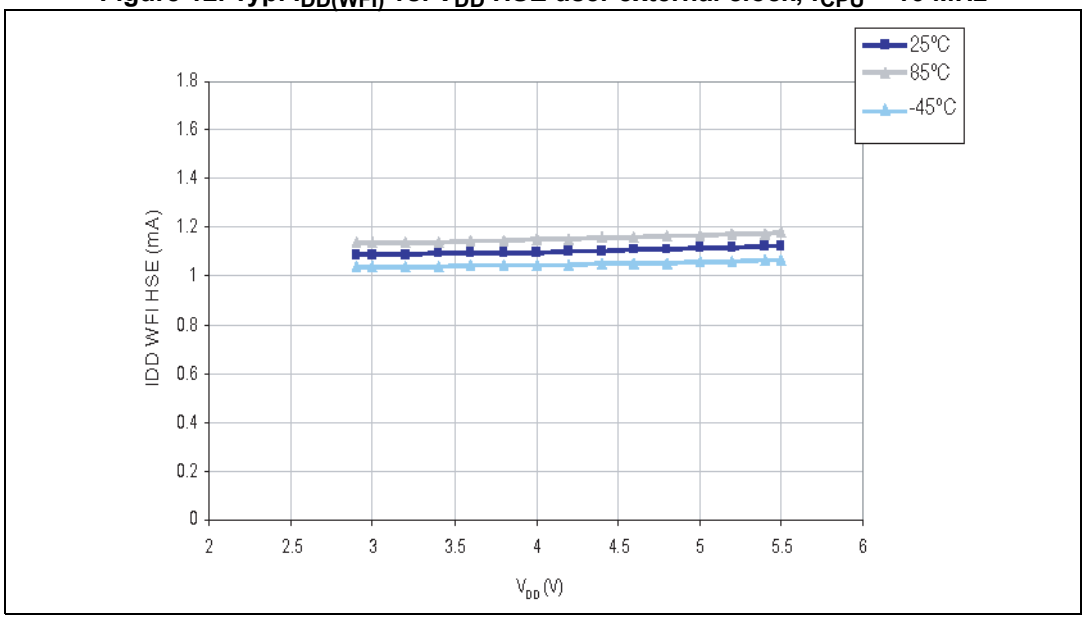

Figure 13. Typ. $I_{DD(WFI)}$ vs. f_{CPU}, HSE user external clock, V_{DD} = 5 V

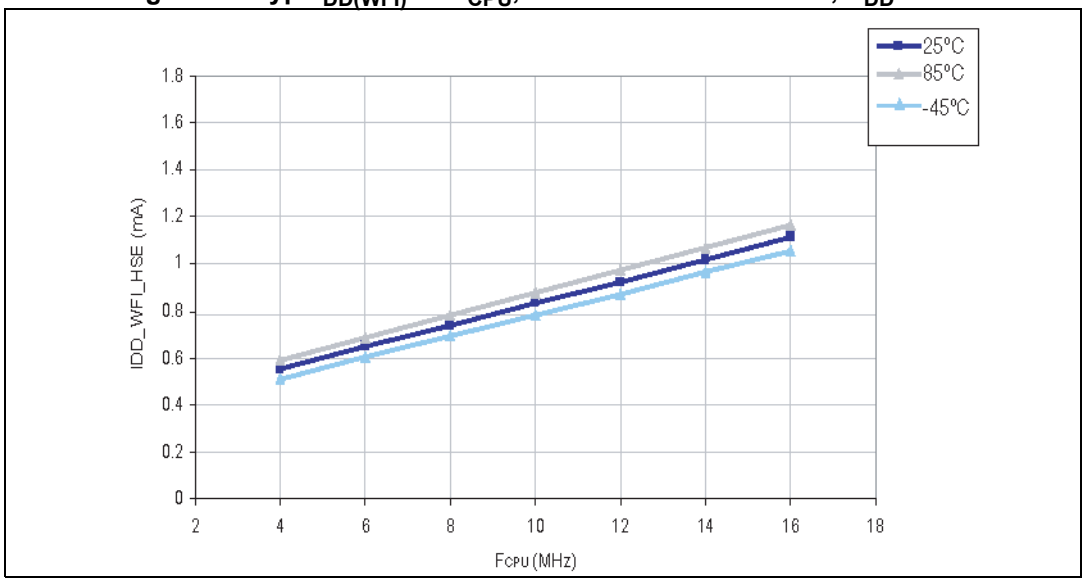

Figure 14. Typ. $I_{DD(WFI)}$ vs V_{DD}, HSI RC osc, f_{CPU} = 16 MHz

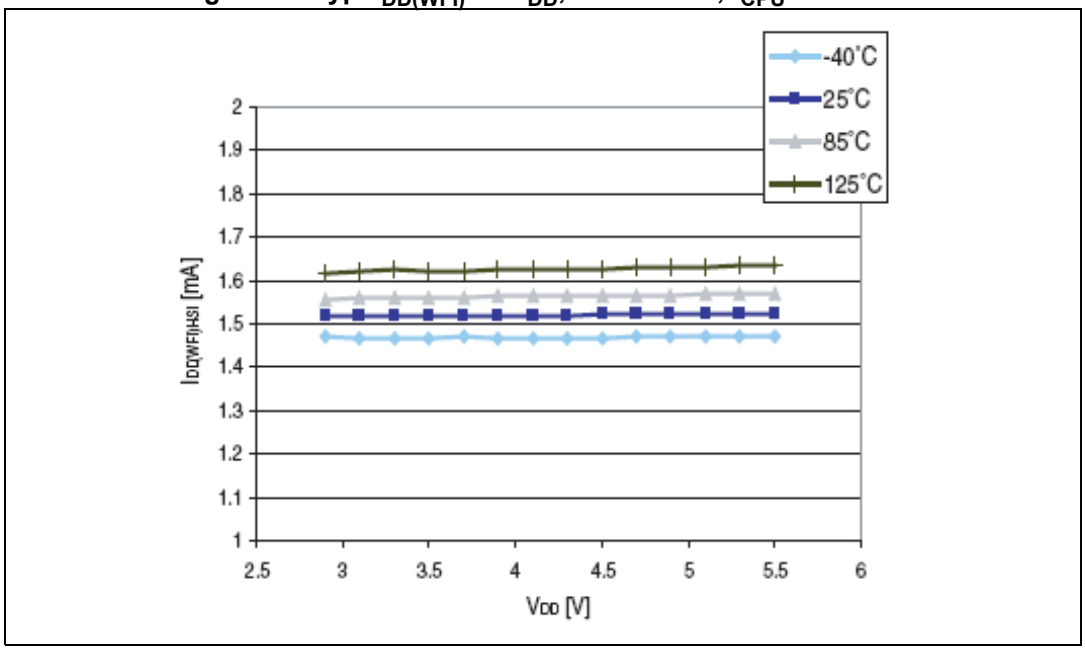

9.3.3 External clock sources and timing characteristics

HSE user external clock

Subject to general operating conditions for V_{DD} and T_A.

Table 30. HSE user external clock characteristics

Symbol	Parameter	Conditions	Min	Typ	Max	Unit
f_{HSE_ext}	User external clock source frequency	-	0	-	16	MHz
V_{HSEH}(1)	OSCIN input pin high level voltage		0.7 x V_{DD}	-	V_{DD} + 0.3 V	V
V_{HSEL}(1)	OSCIN input pin low level voltage		V_{SS}	-	0.3 x V_{DD}	
I_{LEAK_HSE}	OSCIN input leakage current	$V_{SS} < V_{IN} < V_{DD}$	-1	-	+1	µA

1. Guaranteed by characterization results.

Figure 15. HSE external clock source

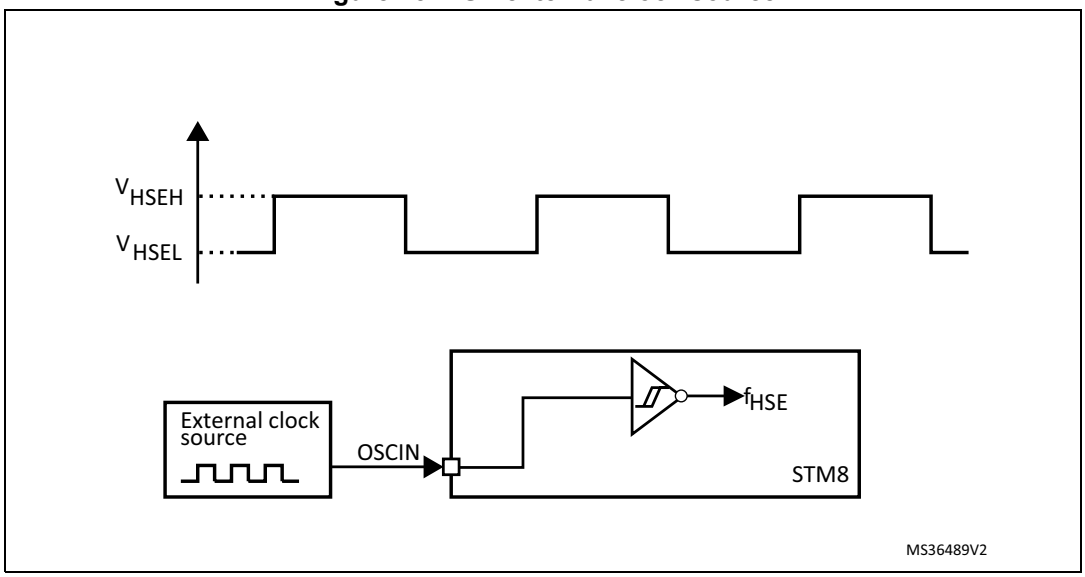

9.3.4 Internal clock sources and timing characteristics

Subject to general operating conditions for V_{DD} and T_A.

High speed internal RC oscillator (HSI)

Table 31. HSI oscillator characteristics

Symbol	Parameter	Conditions	Min	Typ	Max	Unit
f_{HSI}	Frequency	-	-	16	-	MHz
ACC_{HSI}	Accuracy of HSI oscillator	User-trimmed with the CLK_HSITRIMR register for given V_{DD} and T_A conditions(1)	-	-	1.0(2)	%
	Accuracy of HSI oscillator (factory calibrated)	V_{DD} = 5 V, T_A = 25 °C	-2.5	-	1.5	
		V_{DD} = 5 V, -40 °C ≤ T_A ≤ 125 °C	-5	-	5	
$t_{su(HSI)}$	HSI oscillator wakeup time including calibration	-	-	-	1.0(2)	µs
$I_{DD(HSI)}$	HSI oscillator power consumption	-	-	170	250(3)	µA

1. See the application note.
2. Guaranteed by design.
3. Guaranteed by characterization results.

Figure 16. Typical HSI frequency variation vs V_{DD} at 4 temperatures

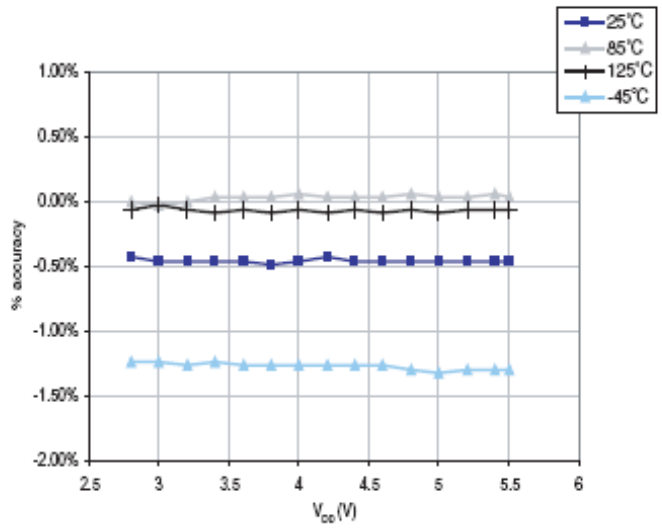

Low speed internal RC oscillator (LSI)

Subject to general operating conditions for V_{DD} and T_A.

Table 32. LSI oscillator characteristics

Symbol	Parameter	Conditions	Min	Typ	Max	Unit
f_{LSI}	Frequency	-	-	128	-	kHz

Table 32. LSI oscillator characteristics (continued)

Symbol	Parameter	Conditions	Min	Typ	Max	Unit
$t_{su(LSI)}$	LSI oscillator wakeup time	-	-	-	7(1)	µs
$I_{DD(LSI)}$	LSI oscillator power consumption	-	-	5	-	µA

1. Guaranteed by design.

Figure 17. Typical LSI frequency variation vs V_{DD} @ 4 temperatures

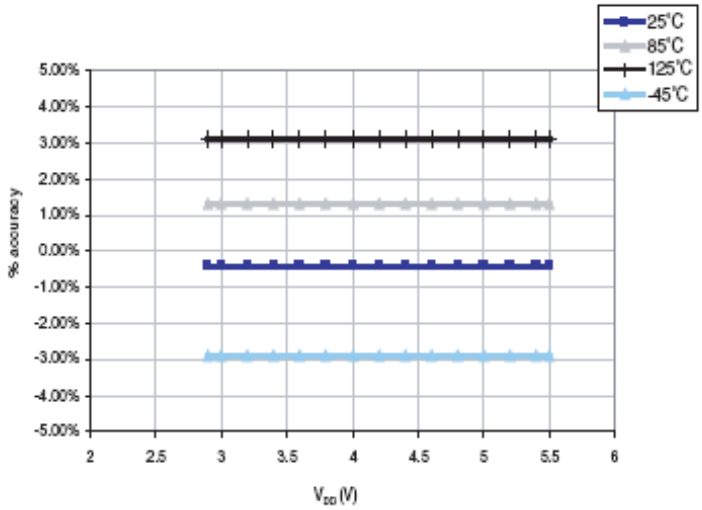

9.3.5 Memory characteristics

RAM and hardware registers

Table 33. RAM and hardware registers

Symbol	Parameter	Conditions	Min	Unit
V_{RM}	Data retention mode(1)	Halt mode (or reset)	$V_{IT\text{-}max}$(2)	V

1. Minimum supply voltage without losing data stored in RAM (in halt mode or under reset) or in hardware registers (only in halt mode). Guaranteed by design.
2. Refer to *Table 18 on page 44* for the value of $V_{IT\text{-}max}$.

Flash program memory and data EEPROM

General conditions: T_A = -40 to 85 °C.

Table 34. Flash program memory and data EEPROM

Symbol	Parameter	Conditions	Min(1)	Typ	Max	Unit
V_{DD}	Operating voltage (all modes, execution/write/erase)	$f_{CPU} \leq 16$ MHz	2.95	-	5.5	V
t_{prog}	Standard programming time (including erase) for byte/word/block (1 byte/4 bytes/64 bytes)	-	-	6.0	6.6	ms
	Fast programming time for 1 block (64 bytes)	-	-	3.0	3.3	ms
t_{erase}	Erase time for 1 block (64 bytes)	-	-	3.0	3.3	ms
N_{RW}	Erase/write cycles(2) (program memory)	T_A = 85 °C	100	-	-	cycles
	Erase/write cycles(2) (data memory)		100 k	-	-	
t_{RET}	Data retention (program memory) after 100 erase/write cycles at T_A = 85 °C	T_{RET} = 55° C	20	-	-	years
	Data retention (data memory) after 10 k erase/write cycles at T_A = 85 °C		20	-	-	
	Data retention (data memory) after 100 k erase/write cycles at T_A = 125 °C	T_{RET} = 85° C	1.0	-	-	
I_{DD}	Supply current (Flash programming or erasing for 1 to 128 bytes)	-	-	2.0	-	mA

1. Guaranteed by characterization results.
2. The physical granularity of the memory is 4 bytes, so cycling is performed on 4 bytes even when a write/erase operation addresses a single byte.

9.3.6 I/O port pin characteristics

General characteristics

Subject to general operating conditions for V_{DD} and T_A unless otherwise specified. All unused pins must be kept at a fixed voltage: using the output mode of the I/O for example or an external pull-up or pull-down resistor.

Table 35. I/O static characteristics

Symbol	Parameter	Conditions	Min	Typ	Max	Unit
V_{IL}	Input low level voltage	V_{DD} = 5 V	-0.3	-	0.3 x V_{DD}	V
V_{IH}	Input high level voltage		0.7 x V_{DD}	-	V_{DD} + 0.3 V	V
V_{hys}	Hysteresis(1)		-	700	-	mV
R_{pu}	Pull-up resistor	V_{DD} = 5 V, V_{IN} = V_{SS}	30	55	80	kΩ
t_R, t_F	Rise and fall time (10% - 90%)	Fast I/Os Load = 50 pF	-	-	20(2)	ns
		Standard and high sink I/Os Load = 50 pF	-	-	125(2)	ns
I_{lkg}	Input leakage current, analog and digital	$V_{SS} \leq V_{IN} \leq V_{DD}$	-	-	±1	µA
$I_{lkg\ ana}$	Analog input leakage current	$V_{SS} \leq V_{IN} \leq V_{DD}$	-	-	±250 (3)	nA
$I_{lkg(inj)}$	Leakage current in adjacent I/O	Injection current ±4 mA	-	-	±1(3)	µA

1. Hysteresis voltage between Schmitt trigger switching levels. Guaranteed by characterization results.
2. Guaranteed by design.
3. Guaranteed by characterization results.

Figure 18. Typical V_{IL} and V_{IH} vs V_{DD} @ 4 temperatures

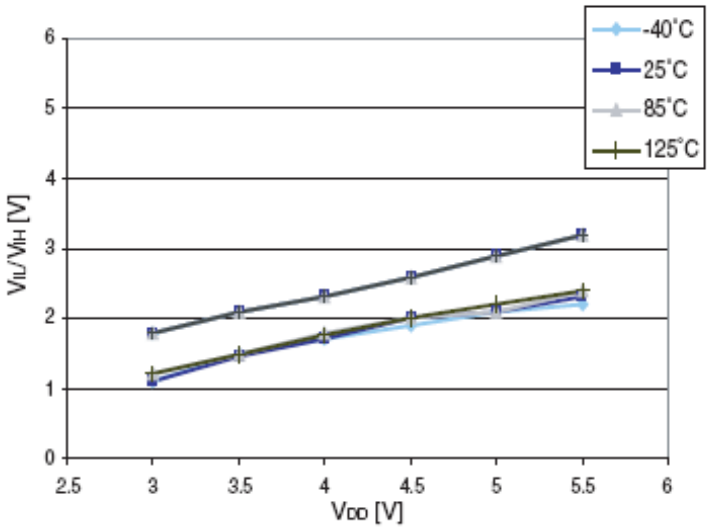

Figure 19. Typical pull-up resistance vs V_{DD} @ 4 temperatures

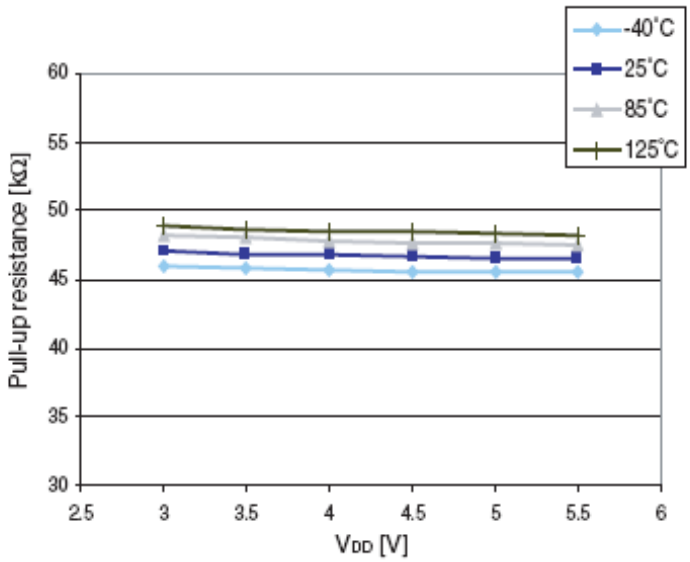

Figure 20. Typical pull-up current vs V_{DD} @ 4 temperatures

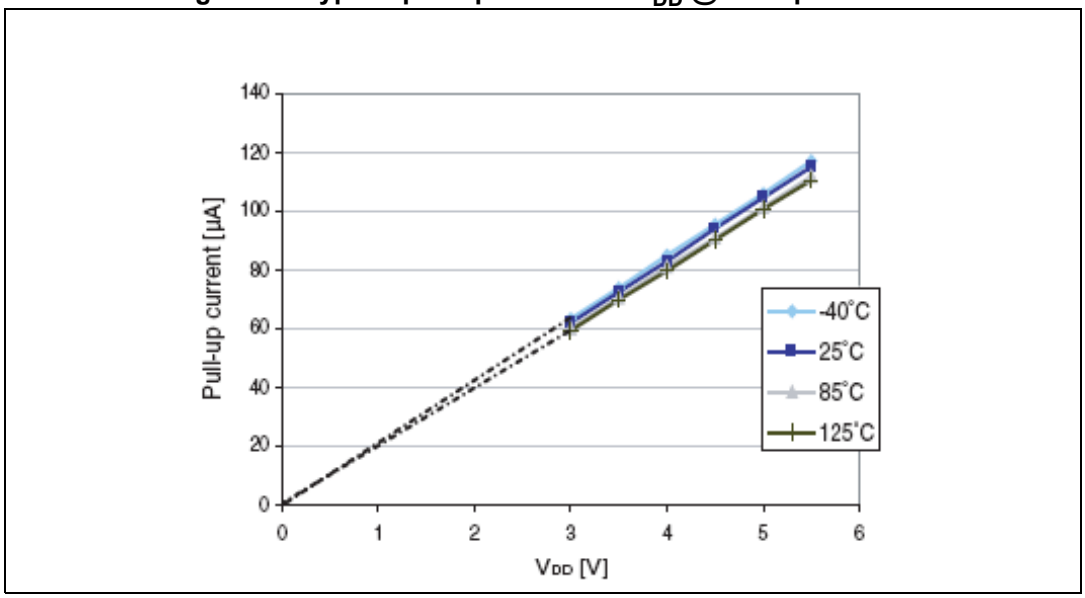

1. The pull-up is a pure resistor (slope goes through 0).

Table 36. Output driving current (standard ports)

Symbol	Parameter	Conditions	Min	Max	Unit
V_{OL}	Output low level with 8 pins sunk	I_{IO} = 10 mA, V_{DD} = 5 V	-	2	V
	Output low level with 4 pins sunk	I_{IO} = 4 mA, V_{DD} = 3.3 V	-	1(1)	
V_{OH}	Output high level with 8 pins sourced	I_{IO} = 10 mA, V_{DD} = 5 V	2.8	-	V
	Output high level with 4 pins sourced	I_{IO} = 4 mA, V_{DD} = 3.3 V	2.1(1)	-	

1. Guaranteed by characterization results.

Table 37. Output driving current (true open drain ports)

Symbol	Parameter	Conditions	Max	Unit
V_{OL}	Output low level with 2 pins sunk	I_{IO} = 10 mA, V_{DD} = 5 V	1	V
		I_{IO} = 10 mA, V_{DD} = 3.3 V	1.5(1)	
		I_{IO} = 20 mA, V_{DD} = 5 V	2(1)	

1. Guaranteed by characterization results.

Table 38. Output driving current (high sink ports)

Symbol	Parameter	Conditions	Min	Max	Unit
V_{OL}	Output low level with 8 pins sunk	I_{IO} = 10 mA, V_{DD} = 5 V	-	0.8	V
	Output low level with 4 pins sunk	I_{IO} = 10 mA, V_{DD} = 3.3 V	-	1.0(1)	
	Output low level with 4 pins sunk	I_{IO} = 20 mA, V_{DD} = 5 V	-	1.5(1)	
V_{OH}	Output high level with 8 pins sourced	I_{IO} = 10 mA, V_{DD} = 5 V	4.0	-	
	Output high level with 4 pins sourced	I_{IO} = 10 mA, V_{DD} = 3.3 V	2.1(1)	-	
	Output high level with 4 pins sourced	I_{IO} = 20 mA, V_{DD} = 5 V	3.3(1)	-	

1. Guaranteed by characterization results.

Typical output level curves

Figure 22 to *Figure 29* show typical output level curves measured with output on a single pin.

Figure 21. Typ. V_{OL} @ V_{DD} = 5 V (standard ports)

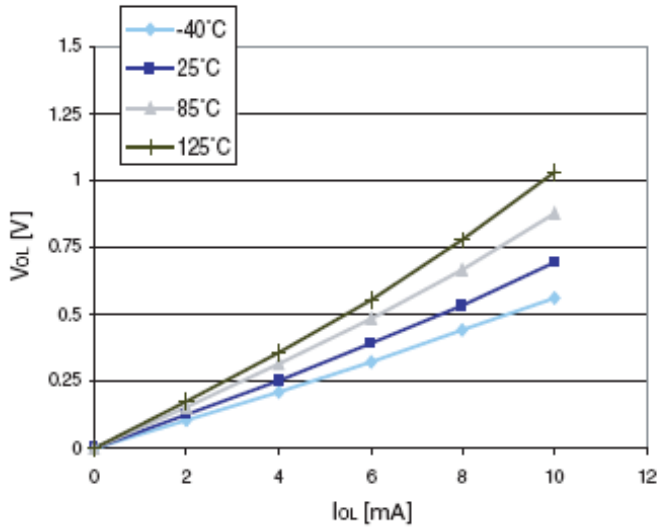

Figure 22. Typ. V_{OL} @ V_{DD} = 3.3 V (standard ports)

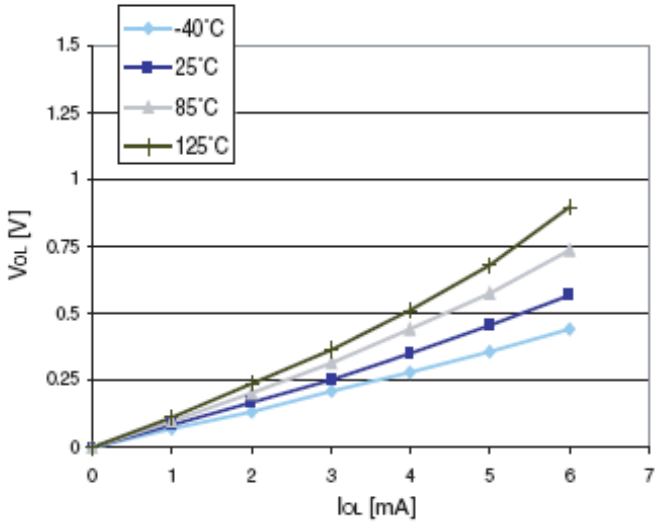

Figure 23. Typ. V_{OL} @ V_{DD} = 5 V (true open drain ports)

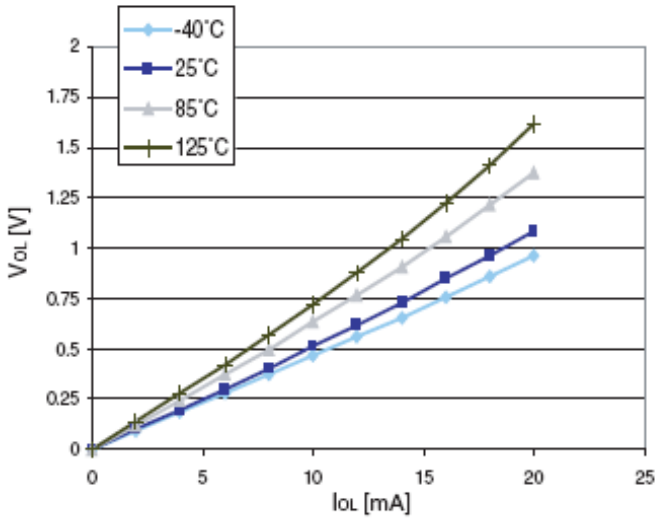

Figure 24. Typ. V_{OL} @ V_{DD} = 3.3 V (true open drain ports)

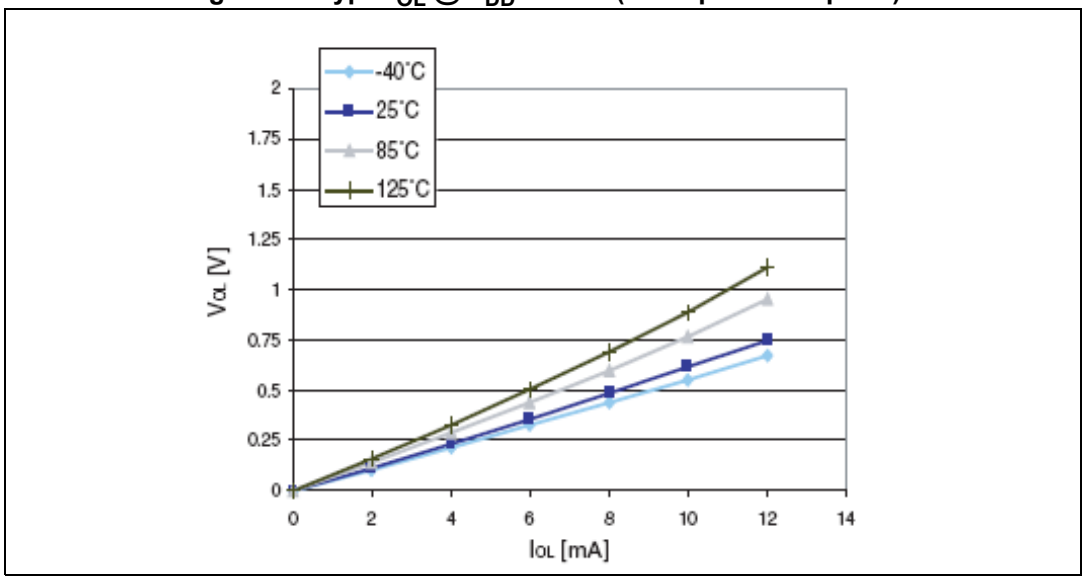

Figure 25. Typ. V_{OL} @ V_{DD} = 5 V (high sink ports)

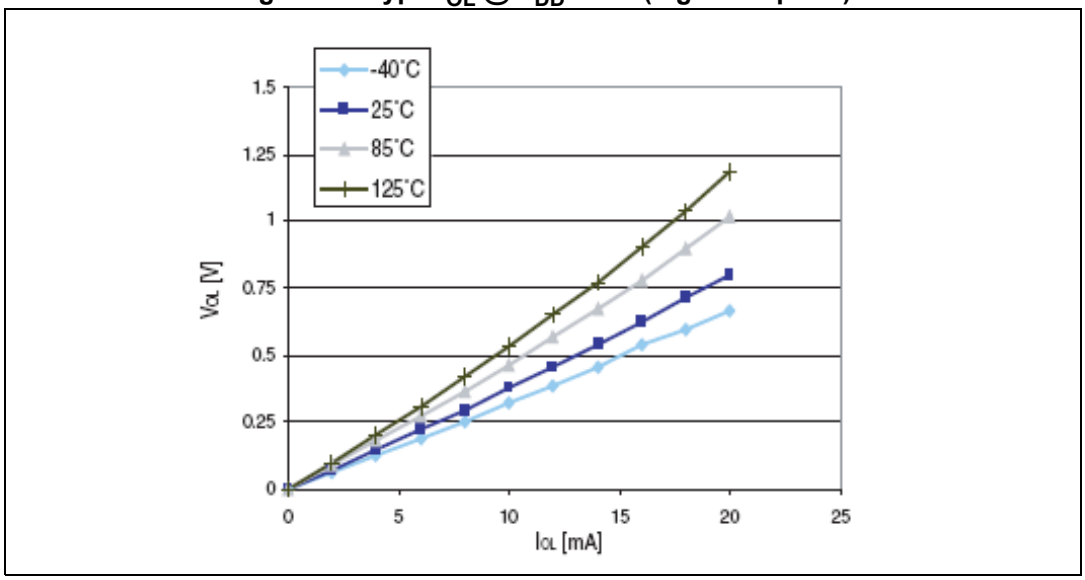

Figure 26. Typ. V_{OL} @ V_{DD} = 3.3 V (high sink ports)

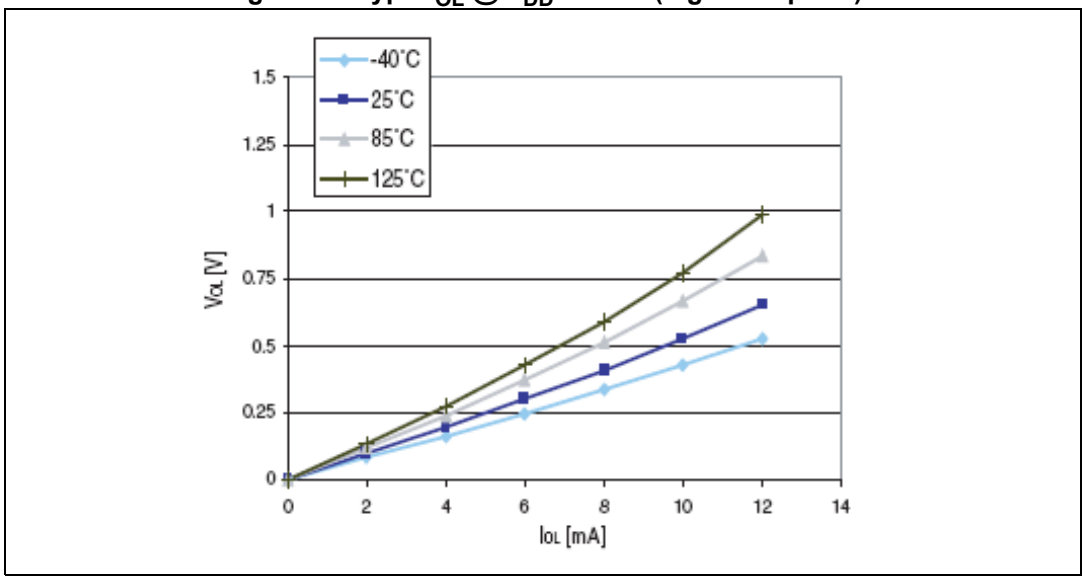

Figure 27. Typ. V_{DD} - V_{OH} @ V_{DD} = 5 V (standard ports)

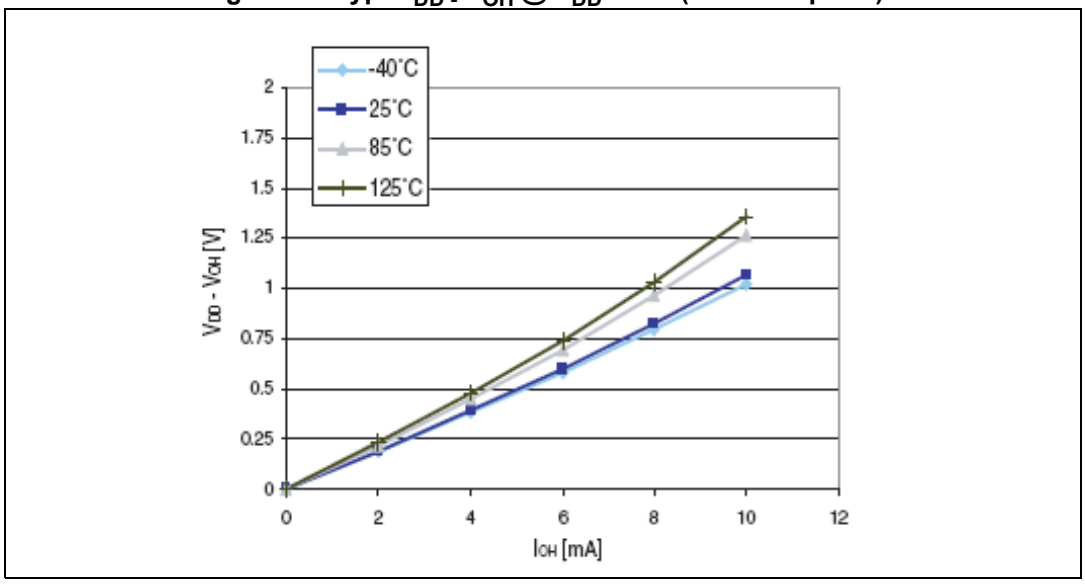

Figure 28. Typ. V_{DD} - V_{OH} @ V_{DD} = 3.3 V (standard ports)

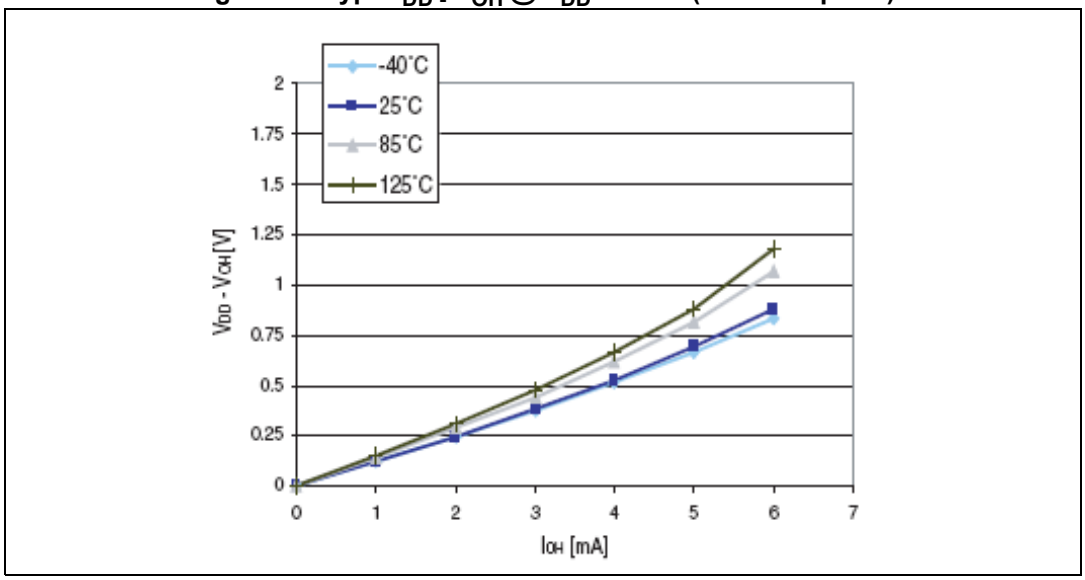

Figure 29. Typ. V_{DD} - V_{OH} @ V_{DD} = 5 V (high sink ports)

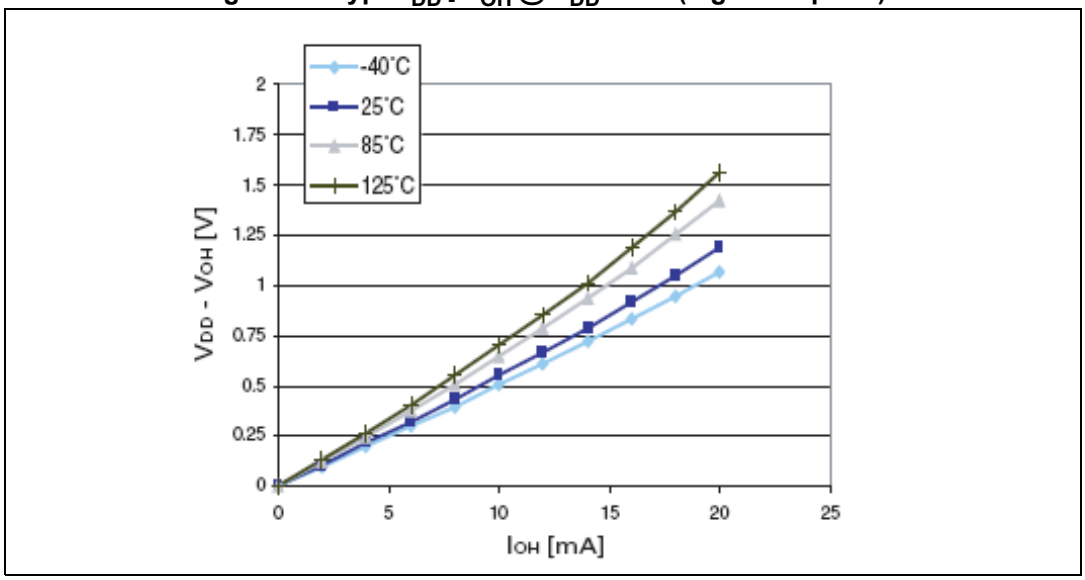

Figure 30. Typ. V_{DD} - V_{OH} @ V_{DD} = 3.3 V (high sink ports)

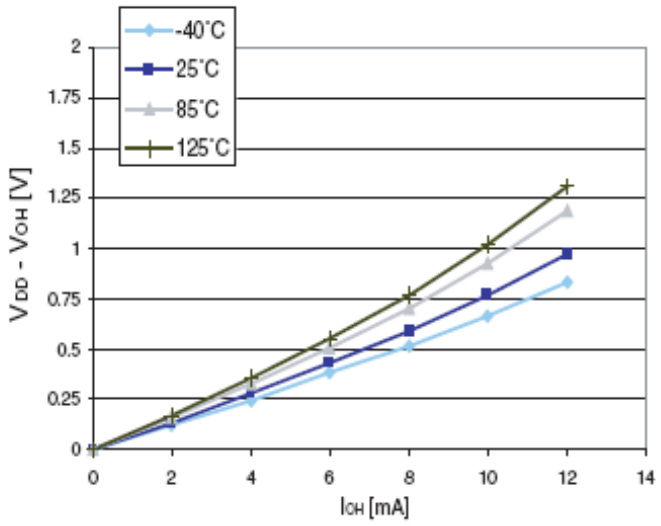

9.3.7 SPI serial peripheral interface

Unless otherwise specified, the parameters given in *Table 39* are derived from tests performed under ambient temperature, f_{MASTER} frequency and V_{DD} supply voltage conditions. $t_{MASTER} = 1/f_{MASTER}$.

Refer to I/O port characteristics for more details on the input/output alternate function characteristics (NSS, SCK, MOSI, MISO).

Table 39. SPI characteristics

Symbol	Parameter	Conditions	Min	Max	Unit
f_{SCK} $1/t_{c(SCK)}$	SPI clock frequency	Master mode	0	8	MHz
		Slave mode	0	7	

Table 39. SPI characteristics (continued)

Symbol	Parameter	Conditions	Min	Max	Unit
$t_{r(SCK)}$ $t_{f(SCK)}$	SPI clock rise and fall time	Capacitive load: C = 30 pF	-	25	ns
$t_{su(NSS)}$ (1)	NSS setup time	Slave mode	4 x t_{MASTER}	-	
$t_{h(NSS)}$ (1)	NSS hold time	Slave mode	70	-	
$t_{w(SCKH)}$ (1) $t_{w(SCKL)}$ (1)	SCK high and low time	Master mode	$t_{SCK}/2$ - 15	$t_{SCK}/2$ + 15	
$t_{su(MI)}$ (1) $t_{su(SI)}$ (1)	Data input setup time	Master mode	5	-	
		Slave mode	5	-	
$t_{h(MI)}$ (1) $t_{h(SI)}$ (1)	Data input hold time	Master mode	7	-	
		Slave mode	10	-	
$t_{a(SO)}$ (1)(2)	Data output access time	Slave mode	-	3 x t_{MASTER}	
$t_{dis(SO)}$ (1)(3)	Data output disable time	Slave mode	25	-	
$t_{v(SO)}$ (1)	Data output valid time	Slave mode (after enable edge)	-	65	
$t_{v(MO)}$ (1)	Data output valid time	Master mode (after enable edge)	-	30	
$t_{h(SO)}$ (1)	Data output hold time	Slave mode (after enable edge)	27	-	
$t_{h(MO)}$ (1)		Master mode (after enable edge)	11	-	

1. Values based on design simulation and/or characterization results, and not tested in production.
2. Min time is for the minimum time to drive the output and the max time is for the maximum time to validate the data.
3. Min time is for the minimum time to invalidate the output and the max time is for the maximum time to put the data in Hi-Z.

Figure 31. SPI timing diagram - slave mode and CPHA = 0

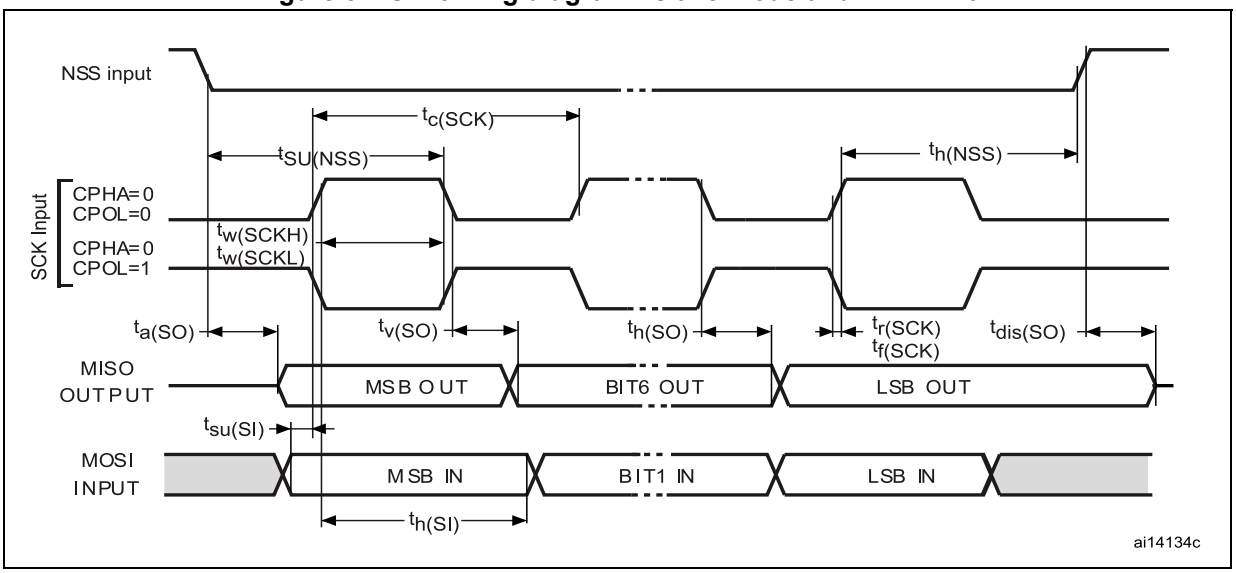

Figure 32. SPI timing diagram - slave mode and CPHA = 1(1)

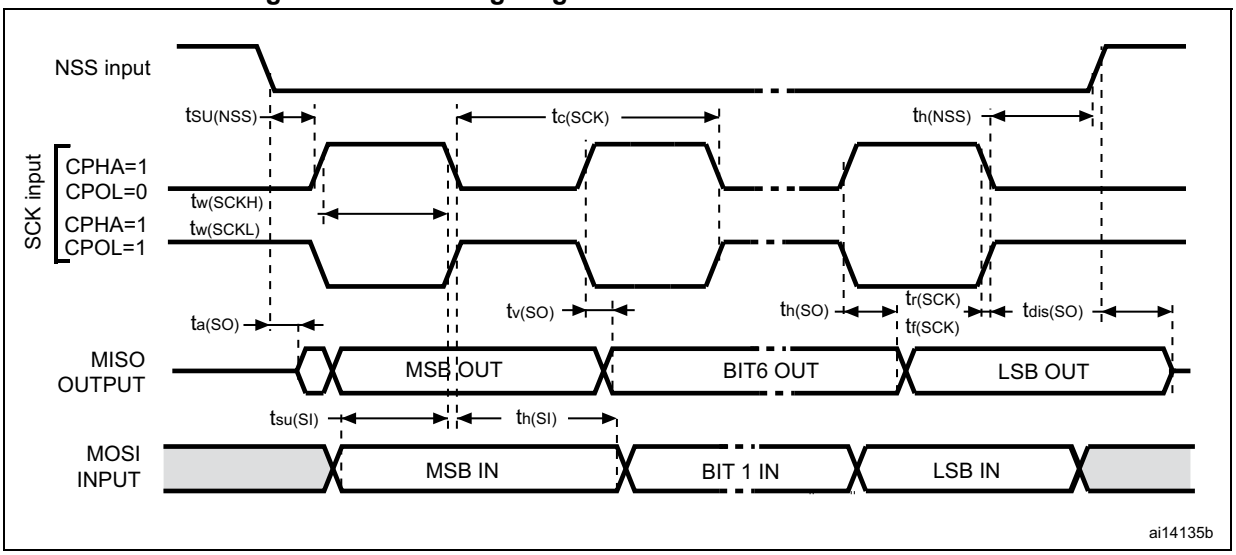

1. Measurement points are done at CMOS levels: 0.3 V_{DD} and 0.7 V_{DD}.

Figure 33. SPI timing diagram - master mode(1)

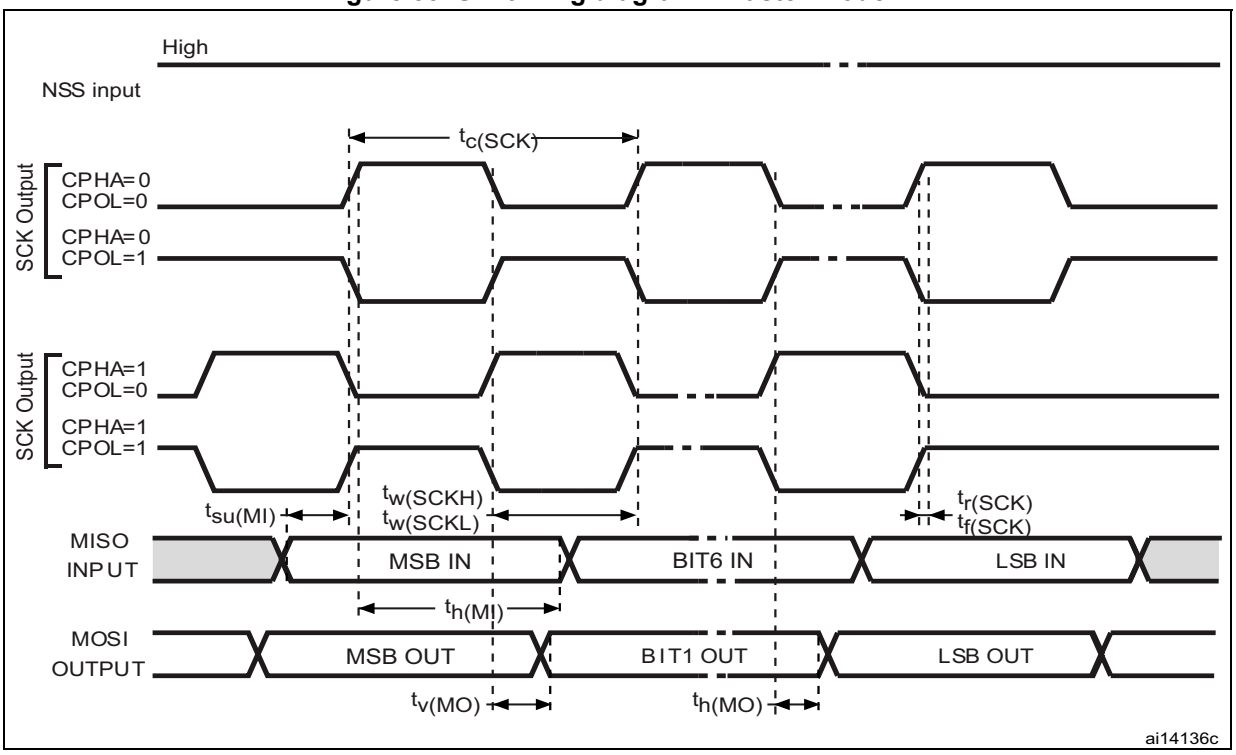

1. Measurement points are done at CMOS levels: 0.3 V_{DD} and 0.7 V_{DD}.

9.3.8 I2C interface characteristics

Table 40. I2C characteristics

Symbol	Parameter	Standard mode I2C		Fast mode I2C(1)		Unit
		Min(2)	Max(2)	Min(2)	Max(2)	
$t_{w(SCLL)}$	SCL clock low time	4.7	-	1.3	-	µs
$t_{w(SCLH)}$	SCL clock high time	4.0	-	0.6	-	
$t_{su(SDA)}$	SDA setup time	250	-	100	-	ns
$t_{h(SDA)}$	SDA data hold time	0(3)	-	0(4)	900(3)	
$t_{r(SDA)}$ $t_{r(SCL)}$	SDA and SCL rise time	-	1000	-	300	
$t_{f(SDA)}$ $t_{f(SCL)}$	SDA and SCL fall time	-	300	-	300	
$t_{h(STA)}$	START condition hold time	4.0	-	0.6	-	µs
$t_{su(STA)}$	Repeated START condition setup time	4.7	-	0.6	-	
$t_{su(STO)}$	STOP condition setup time	4.0	-	0.6	-	µs
$t_{w(STO:STA)}$	STOP to START condition time (bus free)	4.7	-	1.3	-	µs
C_b	Capacitive load for each bus line	-	400	-	400	pF

1. f_{MASTER}, must be at least 8 MHz to achieve max fast I2C speed (400 kHz)
2. Data based on standard I2C protocol requirement, not tested in production
3. The maximum hold time of the start condition has only to be met if the interface does not stretch the low time
4. The device must internally provide a hold time of at least 300 ns for the SDA signal in order to bridge the undefined region of the falling edge of SCL

Figure 34. Typical application with I2C bus and timing diagram

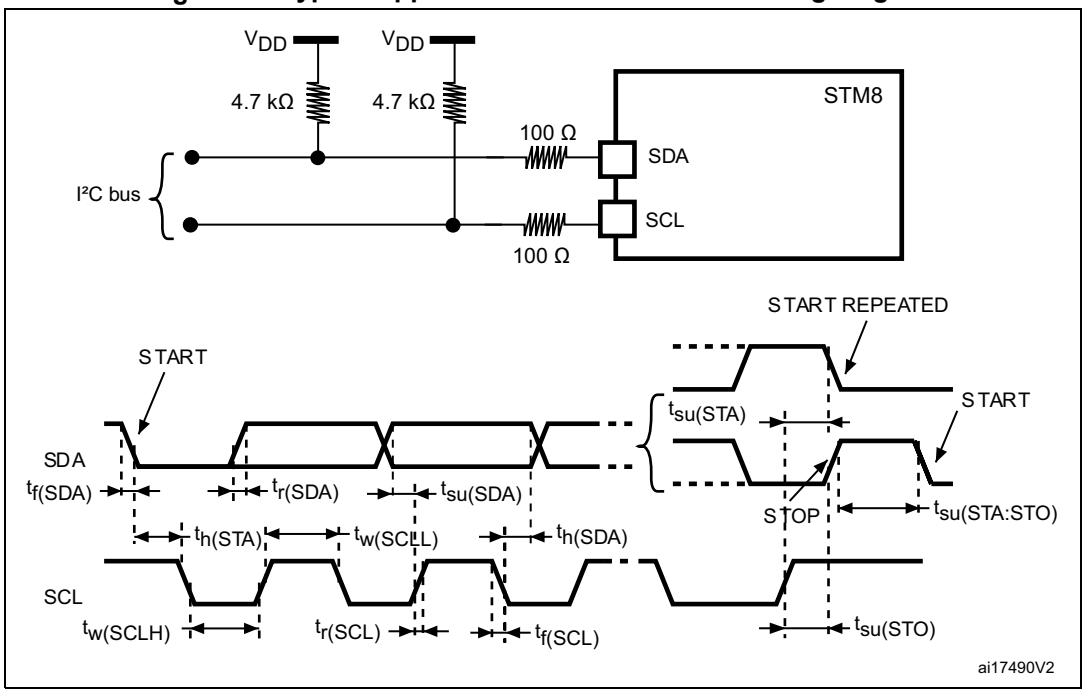

1. Measurement points are made at CMOS levels: 0.3 x V_{DD} and 0.7 x V_{DD}

9.3.9 10-bit ADC characteristics

Subject to general operating conditions for V_{DDA}, f_{MASTER}, and T_A unless otherwise specified.

Table 41. ADC characteristics

Symbol	Parameter	Conditions	Min	Typ	Max	Unit
f_{ADC}	ADC clock frequency	V_{DDA} = 3 to 5.5 V	1	-	4	MHz
		V_{DDA} = 4.5 to 5.5 V	1	-	6	
V_{AIN}	Conversion voltage range(1)	-	V_{SS}	-	V_{DD}	V
V_{BGREF}	Internal bandgap reference voltage	V_{DDA}= 2.95 to 5.5 V	1.19	1.22	1.25	V
C_{ADC}	Internal sample and hold capacitor	-	-	3	-	pF
t_S(1)	Sampling time	f_{ADC} = 4 MHz	-	0.75	-	µs
		f_{ADC} = 6 MHz	-	0.5	-	
t_{STAB}	Wakeup time from standby	-	-	7	-	µs
t_{CONV}	Total conversion time (including sampling time, 10-bit resolution)	f_{ADC} = 4 MHz	3.5			µs
		f_{ADC} = 6 MHz	2.33			µs
		-	14			$1/f_{ADC}$

1. During the sample time the input capacitance C_{AIN} (3 pF max) can be charged/discharged by the external source. The internal resistance of the analog source must allow the capacitance to reach its final voltage level within t_S. After the end of the sample time t_S, changes of the analog input voltage have no effect on the conversion result. Values for the sample clock t_S depend on programming.

Table 42. ADC accuracy with R_{AIN} < 10 kΩ , V_{DD} = 5 V

Symbol	Parameter	Conditions	Typ	Max(1)	Unit
$\|E_T\|$	Total unadjusted error (2)	f_{ADC} = 2 MHz	1.6	3.5	LSB
		f_{ADC} = 4 MHz	2.2	4	
		f_{ADC} = 6 MHz	2.4	4.5	
$\|E_O\|$	Offset error (2)	f_{ADC} = 2 MHz	1.1	2.5	
		f_{ADC} = 4 MHz	1.5	3	
		f_{ADC} = 6 MHz	1.8	3	
$\|E_G\|$	Gain error (2)	f_{ADC} = 2 MHz	1.5	3	
		f_{ADC} = 4 MHz	2.1	3	
		f_{ADC} = 6 MHz	2.2	4	
$\|E_D\|$	Differential linearity error (2)	f_{ADC} = 2 MHz	0.7	1.5	
		f_{ADC} = 4 MHz	0.7	1.5	
		f_{ADC} = 6 MHz	0.7	1.5	
$\|E_L\|$	Integral linearity error (2)	f_{ADC} = 2 MHz	0.6	1.5	
		f_{ADC} = 4 MHz	0.8	2	
		f_{ADC} = 6 MHz	0.8	2	

1. Guaranteed by characterization results.
2. ADC accuracy vs. negative injection current: Injecting negative current on any of the analog input pins should be avoided as this significantly reduces the accuracy of the conversion being performed on another analog input. It is recommended to add a Schottky diode (pin to ground) to standard analog pins which may potentially inject negative current. Any positive injection current within the limits specified for $I_{INJ(PIN)}$ and $\Sigma I_{INJ(PIN)}$ in *Section 9.3.6* does not affect the ADC accuracy.

Table 43. ADC accuracy with R_{AIN} < 10 kΩ R_{AIN}, V_{DD} = 3.3 V

Symbol	Parameter	Conditions	Typ	Max(1)	Unit
$\|E_T\|$	Total unadjusted error(2)	f_{ADC} = 2 MHz	1.6	3.5	LSB
		f_{ADC} = 4 MHz	1.9	4	
$\|E_O\|$	Offset error(2)	f_{ADC} = 2 MHz	1	2.5	
		f_{ADC} = 4 MHz	1.5	2.5	
$\|E_G\|$	Gain error(2)	f_{ADC} = 2 MHz	1.3	3	
		f_{ADC} = 4 MHz	2	3	
$\|E_D\|$	Differential linearity error(2)	f_{ADC} = 2 MHz	0.7	1.0	
		f_{ADC} = 4 MHz	0.7	1.5	
$\|E_L\|$	Integral linearity error(2)	f_{ADC} = 2 MHz	0.6	1.5	
		f_{ADC} = 4 MHz	0.8	2	

1. Guaranteed by characterization results.
2. ADC accuracy vs. negative injection current: Injecting negative current on any of the analog input pins should be avoided as this significantly reduces the accuracy of the conversion being performed on another analog input. It is recommended to add a Schottky diode (pin to ground) to standard analog pins which may potentially inject negative current. Any positive injection current within the limits specified for $I_{INJ(PIN)}$ and $\Sigma I_{INJ(PIN)}$ in *Section 9.3.6* does not affect the ADC accuracy.

Figure 35. ADC accuracy characteristics

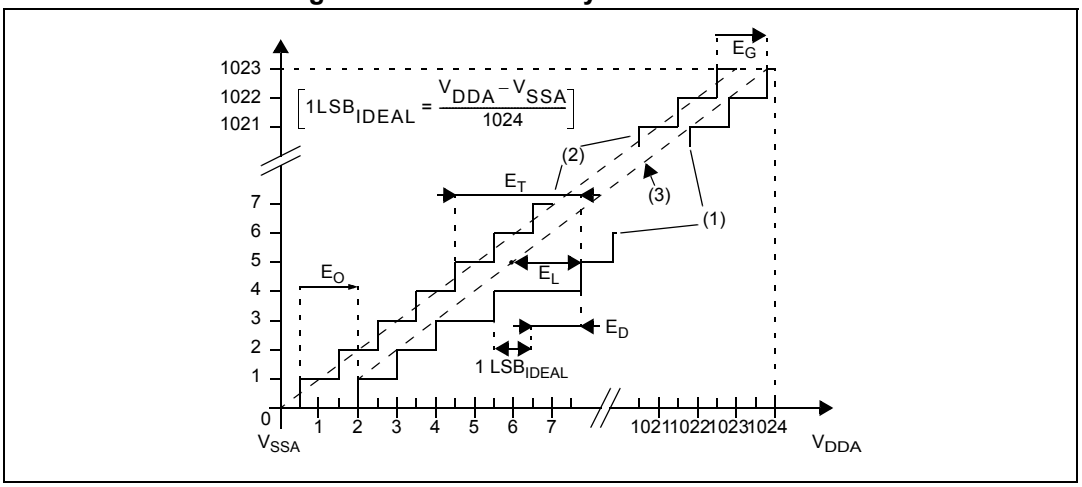

1. Example of an actual transfer curve.
2. The ideal transfer curve
3. End point correlation line
   E_T = Total unadjusted error: maximum deviation between the actual and the ideal transfer curves.
   E_O = Offset error: deviation between the first actual transition and the first ideal one.
   E_G = Gain error: deviation between the last ideal transition and the last actual one.
   E_D = Differential linearity error: maximum deviation between actual steps and the ideal one.
   E_L = Integral linearity error: maximum deviation between any actual transition and the end point correlation line.

Figure 36. Typical application with ADC

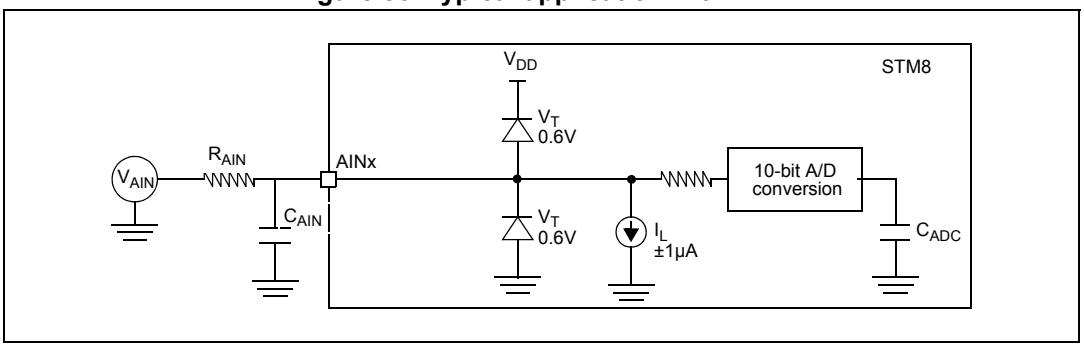

9.3.10 EMC characteristics

Susceptibility tests are performed on a sample basis during product characterization.

Functional EMS (electromagnetic susceptibility)

While executing a simple application (toggling 2 LEDs through I/O ports), the product is stressed by two electromagnetic events until a failure occurs (indicated by the LEDs).

- **ESD**: Electrostatic discharge (positive and negative) is applied on all pins of the device until a functional disturbance occurs. This test conforms with the IEC 61000-4-2 standard.
- **FTB**: A burst of fast transient voltage (positive and negative) is applied to V_{DD} and V_{SS} through a 100 pF capacitor, until a functional disturbance occurs. This test conforms with the IEC 61000-4-4 standard.

A device reset allows normal operations to be resumed. The test results are given in the table below based on the EMS levels and classes defined in application note AN1709.

Designing hardened software to avoid noise problems

EMC characterization and optimization are performed at component level with a typical application environment and simplified MCU software. It should be noted that good EMC performance is highly dependent on the user application and the software in particular.

Therefore it is recommended that the user applies EMC software optimization and prequalification tests in relation with the EMC level requested for his application.

Software recommendations

The software flowchart must include the management of runaway conditions such as:

- Corrupted program counter
- Unexpected reset
- Critical data corruption (control registers...)

Prequalification trials

To complete these trials, ESD stress can be applied directly on the device, over the range of specification values. When unexpected behavior is detected, the software can be hardened to prevent unrecoverable errors occurring (see application note AN1015).

Table 44. EMS data

Symbol	Parameter	Conditions	Level/class
V_{FESD}	Voltage limits to be applied on any I/O pin to induce a functional disturbance	V_{DD} = 3.3 V, T_A = 25 °C, f_{MASTER} = 16 MHz, conforming to IEC 61000-4-2	TBD(1)
V_{EFTB}	Fast transient voltage burst limits to be applied through 100pF on V_{DD} and V_{SS} pins to induce a functional disturbance	V_{DD} = 3.3 V, T_A = 25 °C, f_{MASTER} = 16 MHz, conforming to IEC 61000-4-4	TBD(1)

1. Data obtained with HSI clock configuration, after applying HW recommendations described in AN2860 - EMC guidelines for STM8Smicrocontrollers.

Electromagnetic interference (EMI)

Based on a simple application running on the product (toggling two LEDs through the I/O ports), the product is monitored in terms of emission. Emission tests conform to the IEC 61967-2 standard for test software, board layout and pin loading.

Table 45. EMI data

Symbol	Parameter	Conditions				Unit
		General conditions	Monitored frequency band	Max f_{HSE}/f_{CPU}(1)		
				16 MHz/ 8 MHz	16 MHz/ 16 MHz	
S_{EMI}	Peak level	V_{DD} = 5 V T_A = 25 °C SO8N package conforming to IEC 61967-2	0.1 MHz to 30 MHz	TBD	TBD	dBµV
			30 MHz to 130 MHz	TBD	TBD	
			130 MHz to 1 GHz	TBD	TBD	
	EMI level		-	TBD	TBD	-

1. Guaranteed by characterization results.

Absolute maximum ratings (electrical sensitivity)

Based on three different tests (ESD, DLU and LU) using specific measurement methods, the product is stressed in order to determine its performance in terms of electrical sensitivity. For more details, refer to the application note AN1181.

Electrostatic discharge (ESD)

Electrostatic discharges (one positive then one negative pulse separated by 1 second) are applied to the pins of each sample according to each pin combination. The sample size depends on the number of supply pins in the device (3 parts*(n+1) supply pin). One model can be simulated: the Human Body Model (HBM). This test conforms to the JESD22-A114A/A115A standard. For more details, refer to the application note AN1181.

Table 46. ESD absolute maximum ratings

Symbol	Ratings	Conditions	Class	Maximum value(1)	Unit
$V_{ESD(HBM)}$	Electrostatic discharge voltage (Human body model)	T_A = 25°C, conforming to JESD22-A114	A	TBD	V
$V_{ESD(CDM)}$	Electrostatic discharge voltage (Charge device model)	T_A= 25°C, conforming to JESD22-C101	IV	TBD	V

1. Guaranteed by characterization results.

Static latch-up

Two complementary static tests are required on 10 parts to assess the latch-up performance:

- A supply overvoltage (applied to each power supply pin)
- A current injection (applied to each input, output and configurable I/O pin) is performed on each sample.

This test conforms to the EIA/JESD 78 IC latch-up standard. For more details, refer to the application note AN1181.

Table 47. Electrical sensitivities

Symbol	Parameter	Conditions	Class(1)
LU	Static latch-up class	$T_A = 25$ °C	TBD
		$T_A = 85$ °C	TBD

1. Class description: A Class is an STMicroelectronics internal specification. All its limits are higher than the JEDEC specifications, that means when a device belongs to class A it exceeds the JEDEC standard. B class strictly covers all the JEDEC criteria (international standard).

10 Package information

In order to meet environmental requirements, ST offers these devices in different grades of ECOPACK® packages, depending on their level of environmental compliance. ECOPACK® specifications, grade definitions and product status are available at: *www.st.com*. ECOPACK® is an ST trademark.

Failure analysis and guarantee

The small number of pins available induces limitations on failure analysis depth in case of isolated symptoms, typically with an impact lower than 0.1%. Please contact your sales office for additional information for any failure analysis. STMicroelectronics will make a feasibility study for investigation based on failure rate and symptom description prior to responsibility endorsement.

10.1 SO8N package information

Figure 37. SO8N – 8-lead, 4.9 x 6 mm, plastic small outline, 150 mils body width, package outline

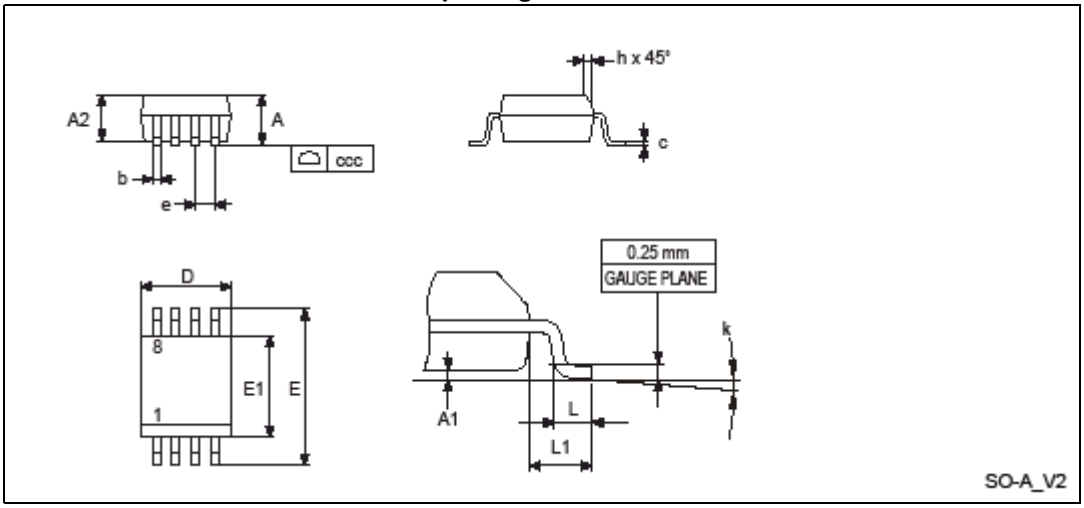

1. Drawing not to scale.

Table 48. SO8N – 8-lead 4.9 x 6 mm, plastic small outline, 150 mils body width, package mechanical data

Symbol	millimeters			inches(1)		
	Min.	Typ.	Max.	Min.	Typ.	Max.
A	-	-	1.750	-	-	0.0689
A1	0.100	-	0.250	0.0039	-	0.0098
A2	1.250	-	-	0.0492	-	-
b	0.280	-	0.480	0.0110	-	0.0189
c	0.170	-	0.230	0.0067	-	0.0091

Table 48. SO8N – 8-lead 4.9 x 6 mm, plastic small outline, 150 mils body width, package mechanical data

Symbol	millimeters			inches[1]		
	Min.	Typ.	Max.	Min.	Typ.	Max.
D	4.800	4.900	5.000	0.1890	0.1929	0.1969
E	5.800	6.000	6.200	0.2283	0.2362	0.2441
E1	3.800	3.900	4.000	0.1496	0.1535	0.1575
e	-	1.270	-	-	0.0500	-
h	0.250	-	0.500	0.0098	-	0.0197
k	0°	-	8°	0°	-	8°
L	0.400	-	1.270	0.0157	-	0.0500
L1	-	1.040	-	-	0.0409	-
ccc	-	-	0.100	-	-	0.0039

1. Values in inches are converted from mm and rounded to four decimal digits.

Figure 38. SO8N – 8-lead 4.9 x 6 mm, plastic small outline, 150 mils body width, package recommended footprint

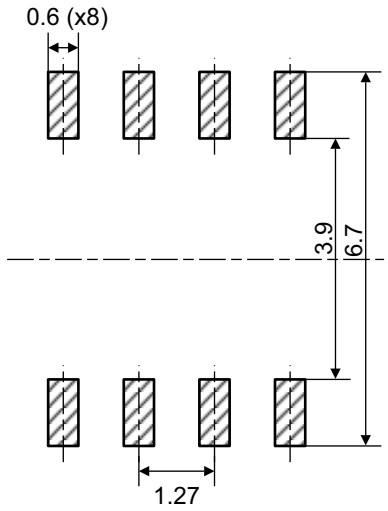

Device marking for SO8N – 8-lead 4.9 x 6 mm, plastic small outline, 150 mils body width

The following figure gives an example of topside marking orientation versus pin 1/ball A1 identifier location.

Other optional marking or inset/upset marks, which identify the parts throughout supply chain operations, are not indicated below.

Figure 39. SO8N – 8-lead 4.9 x 6 mm, plastic small outline, 150 mils body width, marking example

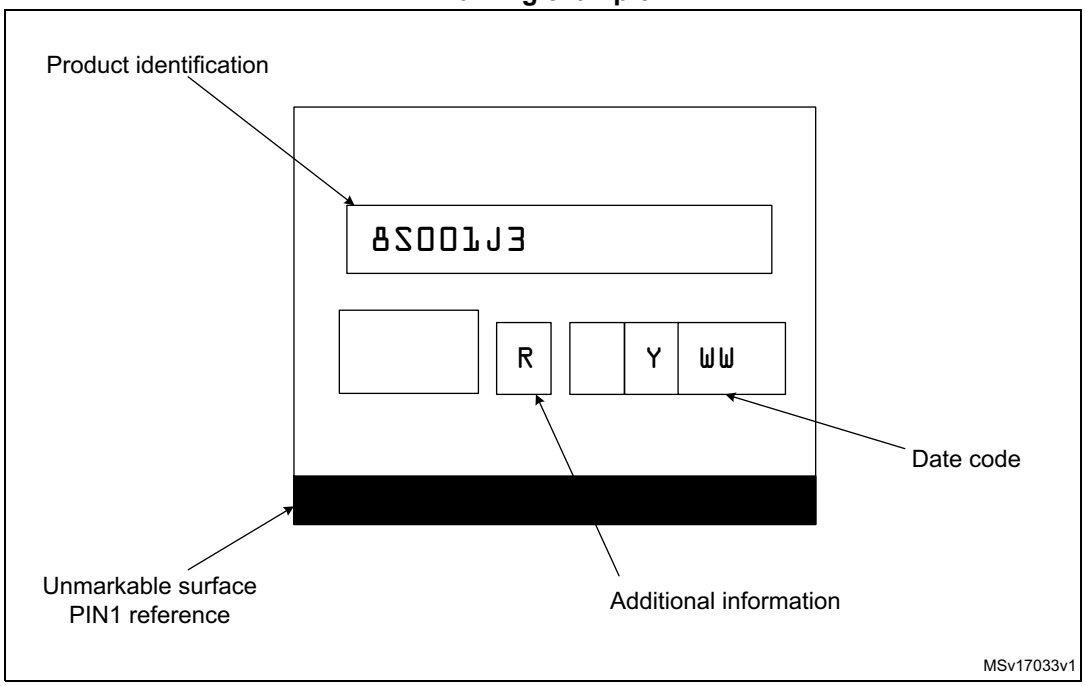

1. Parts marked as ES or E or accompanied by an Engineering Sample notification letter are not yet qualified and therefore not approved for use in production. ST is not responsible for any consequences resulting from such use. In no event will ST be liable for the customer using any of these engineering samples in production. ST's Quality department must be contacted prior to any decision to use these engineering samples to run a qualification activity.

10.2 Thermal characteristics

The maximum chip junction temperature (T_{Jmax}) must never exceed the values given in *Table 17: General operating conditions*.

The maximum chip-junction temperature, T_{Jmax}, in degrees Celsius, may be calculated using the following equation:

$T_{Jmax} = T_{Amax} + (P_{Dmax} \times \Theta_{JA})$

Where:

- T_{Amax} is the maximum ambient temperature in °C
- Θ_{JA} is the package junction-to-ambient thermal resistance in ° C/W
- P_{Dmax} is the sum of P_{INTmax} and $P_{I/Omax}$ ($P_{Dmax} = P_{INTmax} + P_{I/Omax}$)
- P_{INTmax} is the product of I_{DD} and V_{DD}, expressed in Watts. This is the maximum chip internal power.
- $P_{I/Omax}$ represents the maximum power dissipation on output pins, where: $P_{I/Omax} = \Sigma (V_{OL}*I_{OL}) + \Sigma((V_{DD}-V_{OH})*I_{OH})$, and taking account of the actual V_{OL}/I_{OL} and V_{OH}/I_{OH} of the I/Os at low and high level in the application.

Table 49. Thermal characteristics(1)

Symbol	Parameter	Value	Unit
Θ_{JA}	Thermal resistance junction-ambient SO8N	102	°C/W

1. Thermal resistances are based on JEDEC JESD51-2 with 4-layer PCB in a natural convection environment.

10.2.1 Reference document

JESD51-2 integrated circuits thermal test method environment conditions - natural convection (still air). Available from www.jedec.org.

10.2.2 Selecting the product temperature range

When ordering the microcontroller, the temperature range is specified in the order code (see *Figure 40: STM8S001J3 ordering information scheme(1)*).

The following example shows how to calculate the temperature range needed for a given application.

Assuming the following application conditions:

- Maximum ambient temperature T_{Amax}= 75 °C (measured according to JESD51-2)
- I_{DDmax} = 8 mA, V_{DD} = 5.0 V
- Maximum 4 I/Os used at the same time in output at low level with
  I_{OL} = 8 mA, V_{OL}= 0.4 V
  P_{INTmax} = 8 mA x 5.0 V = 40 mW
  P_{Dmax} = 40 mW + (8 x 0.4 x 4) mW
  Thus: P_{Dmax} = 52.8 mW

Using the values obtained in *Section Table 49.: Thermal characteristics* T_{Jmax} is calculated as follows for SO8N package 102 °C/W :

T_{Jmax} = 75 °C + (102 °C/W x 52.8 mW) = 75 °C + 5.4 °C = 80.4 °C.

Above information is within the range (-40 < T_J < 130 °C)

11 Ordering information

Figure 40. STM8S001J3 ordering information scheme(1)

Example: STM8 S 001 J 3 M 3 TR

Product class
STM8 microcontroller

Family type
S = standard

Sub-family type
001 = low density

Pin count
J = 8 pins

Program memory size
3 = 8 Kbyte

Package type
M =SO8N

Temperature range
3 = -40°C to 125°C

Packing
No character = tube
TR = Tape and reel

1. For a list of available options (e.g. memory size, package) and orderable part numbers or for further information on any aspect of this device, please go to *www.st.com* or contact the ST Sales Office nearest to you.

12 STM8 development tools

Development tools for the STM8 microcontrollers include the full-featured STice emulation system supported by a complete software tool package including C compiler, assembler and integrated development environment with high-level language debugger. In addition, the STM8 is to be supported by a complete range of tools including starter kits, evaluation boards and a low-cost in-circuit debugger/programmer.

12.1 Emulation and in-circuit debugging tools

The STice emulation system offers a complete range of emulation and in-circuit debugging features on a platform that is designed for versatility and cost-effectiveness. In addition, STM8 application development is supported by a low-cost in-circuit debugger/programmer.

The STice is the fourth generation of full featured emulators from STMicroelectronics. It offers new advanced debugging capabilities including profiling and coverage to help detect and eliminate bottlenecks in application execution and dead code when fine tuning an application.

In addition, STice offers in-circuit debugging and programming of STM8 microcontrollers via the STM8 single wire interface module (SWIM), which allows non-intrusive debugging of an application while it runs on the target microcontroller.

For improved cost effectiveness, STice is based on a modular design that allows users to order exactly what they need to meet their development requirements and to adapt their emulation system to support existing and future ST microcontrollers.

STice key features

- Occurrence and time profiling and code coverage (new features)
- Advanced breakpoints with up to 4 levels of conditions
- Data breakpoints
- Program and data trace recording up to 128 KB records
- Read/write on the fly of memory during emulation
- In-circuit debugging/programming via SWIM protocol
- 8-bit probe analyzer
- 1 input and 2 output triggers
- Power supply follower managing application voltages between 1.62 to 5.5 V
- Modularity that allows users to specify the components users need to meet their development requirements and adapt to future requirements
- Supported by free software tools that include integrated development environment (IDE), programming software interface and assembler for STM8.

12.2 Software tools

STM8 development tools are supported by a complete, free software package from STMicroelectronics that includes ST Visual Develop (STVD) IDE and the ST Visual Programmer (STVP) software interface. STVD provides seamless integration of the Cosmic and Raisonance C compilers for STM8. A free version that outputs up to Kbytes of code is available.

12.2.1 STM8 toolset

STM8 toolset with STVD integrated development environment and STVP programming software is available for free download at *www.st.com*. This package includes:

ST Visual Develop – Full-featured integrated development environment from ST, featuring

- Seamless integration of C and ASM toolsets
- Full-featured debugger
- Project management
- Syntax highlighting editor
- Integrated programming interface
- Support of advanced emulation features for STice such as code profiling and coverage

ST Visual Programmer (STVP) – Easy-to-use, unlimited graphical interface allowing read, write and verify the user STM8 microcontroller Flash program memory, data EEPROM and option bytes. STVP also offers project mode for saving programming configurations and automating programming sequences.

12.2.2 C and assembly toolchains

Control of C and assembly toolchains is seamlessly integrated into the STVD integrated development environment, making it possible to configure and control the building of user application directly from an easy-to-use graphical interface.

Available toolchains include:

- ***Cosmic C compiler for STM8*** – One free version that outputs up to Kbytes of code is available. For more information, see www.cosmic-software.com.
- ***Raisonance C compiler for STM8*** – One free version that outputs up to Kbytes of code. For more information, see www.raisonance.com.
- ***STM8 assembler linker*** – Free assembly toolchain included in the STVD toolset, which allows users to assemble and link the user application source code.

12.3 Programming tools

During the development cycle, STice provides in-circuit programming of the STM8 Flash microcontroller on user application board via the SWIM protocol. Additional tools are to include a low-cost in-circuit programmer as well as ST socket boards, which provide dedicated programming platforms with sockets for programming the user STM8.

For production environments, programmers will include a complete range of gang and automated programming solutions from third-party tool developers already supplying programmers for the STM8 family.

13 Revision history

Table 50. Document revision history

Date	Revision	Changes
24-May-2017	1	Initial release.
29-Jun-2017	2	Updated: *Section 10: Package information* *Figure 3: STM8S001J3 SO8N pinout* *Table 5: STM8S001J3 pin description* *Table 13: STM8S001J3 alternate function remapping bits for 8-pin devices* Added: *Section : Device marking for SO8N – 8-lead 4.9 x 6 mm, plastic small outline, 150 mils body width*
28-Jun-2018	3	Updated: *Analog to digital converter (ADC)* on cover page *Recommendation for SWIM pin (pin #8) sharing* on *Section 4.2* *Section 4.12: Analog-to-digital converter (ADC1)* *Table 5: STM8S001J3 pin description* *Table 13: STM8S001J3 alternate function remapping bits for 8-pin devices* *Table 41: ADC characteristics*

IMPORTANT NOTICE – PLEASE READ CAREFULLY

STMicroelectronics NV and its subsidiaries (“ST”) reserve the right to make changes, corrections, enhancements, modifications, and improvements to ST products and/or to this document at any time without notice. Purchasers should obtain the latest relevant information on ST products before placing orders. ST products are sold pursuant to ST’s terms and conditions of sale in place at the time of order acknowledgement.

Purchasers are solely responsible for the choice, selection, and use of ST products and ST assumes no liability for application assistance or the design of Purchasers’ products.

No license, express or implied, to any intellectual property right is granted by ST herein.

Resale of ST products with provisions different from the information set forth herein shall void any warranty granted by ST for such product.

ST and the ST logo are trademarks of ST. All other product or service names are the property of their respective owners.

Information in this document supersedes and replaces information previously supplied in any prior versions of this document.

© 2018 STMicroelectronics – All rights reserved

Компания «ЭлектроПласт» предлагает заключение долгосрочных отношений при поставках импортных электронных компонентов на взаимовыгодных условиях!

Наши преимущества:

- Оперативные поставки широкого спектра электронных компонентов отечественного и импортного производства напрямую от производителей и с крупнейших мировых складов;
- Поставка более 17-ти миллионов наименований электронных компонентов;
- Поставка сложных, дефицитных, либо снятых с производства позиций;
- Оперативные сроки поставки под заказ (от 5 рабочих дней);
- Экспресс доставка в любую точку России;
- Техническая поддержка проекта, помощь в подборе аналогов, поставка прототипов;
- Система менеджмента качества сертифицирована по Международному стандарту ISO 9001;
- Лицензия ФСБ на осуществление работ с использованием сведений, составляющих государственную тайну;
- Поставка специализированных компонентов (Xilinx, Altera, Analog Devices, Intersil, Interpoint, Microsemi, Aeroflex, Peregrine, Syfer, Eurofarad, Texas Instrument, Miteq, Cobham, E2V, MA-COM, Hittite, Mini-Circuits,General Dynamics и др.);

Помимо этого, одним из направлений компании «ЭлектроПласт» является направление «Источники питания». Мы предлагаем Вам помощь Конструкторского отдела:

- Подбор оптимального решения, техническое обоснование при выборе компонента;
- Подбор аналогов;
- Консультации по применению компонента;
- Поставка образцов и прототипов;
- Техническая поддержка проекта;
- Защита от снятия компонента с производства.

Как с нами связаться

Телефон: 8 (812) 309 58 32 (многоканальный)
Факс: 8 (812) 320-02-42
Электронная почта: org@eplast1.ru
Адрес: 198099, г. Санкт-Петербург, ул. Калинина, дом 2, корпус 4, литера А.