RFFM8800

Wi-Fi Front End Module

Product Overview

The Qorvo® RFFM8800 is an integrated dual band front end module (FEM) designed for Wi-Fi 4 systems. The compact form factor and integrated matching minimizes layout area in the application.

Performance is focused on optimizing the 2.4GHz and 5GHz PAs for a voltage range from 3 to 4.8V supply voltage that conserves power consumption while maintaining the highest linear output power.

The topology lends itself to applications where 2.4GHz and 5GHz can be run independently on different antennas.

The RFFM8800 integrates a 2.4GHz and 5GHz power amplifier (PA), regulator, a 5GHz single pole two-throw switch (SP2T), a 2.4GHz single-pole three-throw switch and 2.4GHz and 5GHz low noise amplifiers (LNA).

Functional Block Diagram

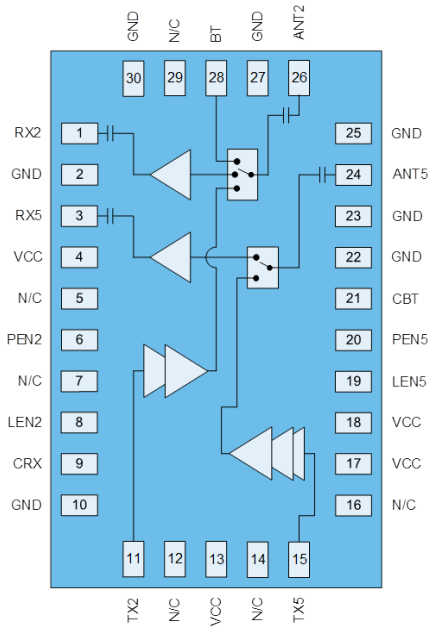

Top View

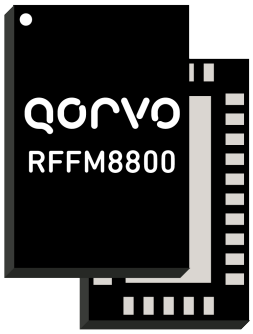

30 Pin 3x5 mm Laminate Package

Key Features

- 5150-5850MHz & 2412 – 2484MHz
- 5GHz P_{OUT} = +17.5dBm MCS7 HT20 -30dB Dynamic EVM
- 2.4GHz P_{OUT} = +18.5dBm MCS7 HT20 -30dB Dynamic EVM
- 2.4GHz P_{OUT} = +21.5dBm 11b Spectral Mask Compliance
- 5GHz 28dB & 2.4GHz 24dB Tx Gain
- 5GHz 2.5dB & 2.4GHz 2dB Noise Figure
- 5GHz 14dB & 2.4GHz 12dB Rx Gain

Applications

- Access Points
- Wireless Routers
- Residential Gateways
- Customer Premise Equipment
- Internet of Things

Ordering Information

Part Number	Description
RFFM8800SB	Sample bag with 5 pieces
RFFM8800SQ	Sample bag with 25 pieces
RFFM8800SR	7” reel with 100 pieces
RFFM8800TR13	13” reel with 2500 pieces
RFFM8800PCK-410	Assembled Evaluation Board + 5 pcs

Absolute Maximum Ratings

Parameter	Conditions	Rating
DC Supply Voltage		-0.5 to +5.4V
Control Voltage	PEN5, PEN2, LEN5 & LEN2	-0.5 to +5V
Storage Temperature		-40 to 150 °C
RF Input Power at TX5	Into 50 Ω Load for 802.11a-n (No Damage), Transmit Mode	+5 dBm
RF Input Power at TX2	Into 50 Ω Load for 802.11b-n (No Damage), Transmit Mode	+0 dBm
RF Input Power at ANT	(No Damage), Receive LNA On Mode, CW	+0 dBm

Exceeding any one or a combination of the Absolute Maximum Rating conditions may cause permanent damage to the device. Extended application of Absolute Maximum Rating conditions to the device may reduce device reliability.

Recommended Operating Conditions

Parameter	Min.	Typ.	Max.	Units
Operating Frequency	2.412		2.484	GHz
	5.15		5.850	GHz
Device Voltage (V_{CC} & V_{DD})	+3	+3.3	+4.8	V
Control Voltage – High	+2.8	+3.1	+4.6	V
Control Voltage - Low	0		+0.2	V
$T_{OPERATING}$	-10		+75	°C
Extended $T_{OPERATING}$	-40		+85	°C

Electrical specifications are measured at specified test conditions. Specifications are not guaranteed over all recommended operating conditions.

5GHz Electrical Specifications

Parameter	Conditions	Min.	Typ.	Max.	Units
TRANSMIT (TX5-ANT5) MODE	**Unless otherwise noted: *f*=5150-5850MHz, V_{CC}=3.3V, T=+25ºC, PEN5=High**				
Wi-Fi 4 HT40 Output Power	MCS7 64QAM 11n		17.5		dBm
Dynamic EVM			-31	-30	dB
ACP11n Spectral Mask	P_{OUT} = +16 dBm, f_C +/-11 MHz		-23	-20	dBc
	P_{OUT} = +16 dBm, f_C +/-20 MHz		-30	-28	dBc
	P_{OUT} = +16 dBm, f_C +/-30 MHz		-43	-40	dBc
ACP11a Spectral Mask	P_{OUT} = +17.5 dBm, f_C +/-11 MHz		-23	-20	dBc
	P_{OUT} = +17.5 dBm, f_C +/-20 MHz		-30	-28	dBc
	P_{OUT} = +17.5 dBm, f_C +/-30 MHz		-43	-40	dBc
Gain		25.5	28	31	dB
TX5 Port Return Loss		5	10		dB
ANT Port Return Loss		15	20		dB
Quiescent Current	RF Off		150		mA
Operating Current	P_{OUT} = +17.5 dBm		215	260	mA
2nd Harmonics	P_{OUT} = +17.5 dBm, BW = 1MHz		-24	-20	dBm/MHz
3rd Harmonics	P_{OUT} = +17.5 dBm, BW = 1MHz		-45	-40	dBm/MHz

Parameter	Conditions	Min.	Typ.	Max.	Units
RECEIVE (ANT5-RX5) LNA ON MODE	**Unless otherwise noted: *f*=5150-5925MHz, V_{CC}=5V, T=+25ºC, BS=HIgh, C1=Low, C0=Low & SLP=High**				
Gain		11	14	17	dB
Out of Band Gain	*f* = 800-1900MHz		7		dB
Noise Figure			2.5	3.5	dB
RX5 Port Return Loss			9		dB
ANT5 Port Return Loss			9		dB
Input P_{1dB}		-20	-15		dBm
Input IP3			-5		dBm
LNA Turn On Time				800	nS
Rx Operating Current			10	15	mA
GENERAL SPECIFICATIONS	**Unless otherwise noted: *f*=5150-5925MHz, V_{CC}=5V, T=+25ºC, Switching Time Power Accuracy +/-1dB**				
Control Current - High	LEN5		2		µA
Control Current - High	CRX, CBT		5		µA
Switch Control Speed				100	nS
Turn On/Off Time	10⇔90% of total gain or power off gain		200	1000	nS
PA Stability - Output VSWR	No Spurious above -41.25dBm/MHz, P_{OUT} = 0 to 17 dBm, CW Signal		4:1		

2.4GHz Electrical Specifications

Parameter	Conditions	Min.	Typ.	Max.	Units
TRANSMIT MODE (TX2-ANT2)	**Unless otherwise noted: *f*=2412-2484MHz, V_{CC}=5V, T=+25ºC, PEN2=High**				
Wi-Fi 4 HT20 Output Power	MCS7 64QAM 11n		17.5		dBm
Dynamic EVM				-34	dB
Wi-Fi 4 HT20 Output Power	MCS7 64QAM 11n		18.5		dBm
Dynamic EVM			-32	-30	dB
11g Output Power	54Mbps		18		dBm
Dynamic EVM			-35	-34	dB
11g Output Power	54Mbps		19.5		dBm
Dynamic EVM			-32	-30	dB
Wi-Fi 4 Spectral Mask	P_{OUT} = +18 dBm, f_C +/-11 MHz		-23	-20	dBc
	P_{OUT} = +18 dBm, f_C +/-20 MHz		-30	-28	dBc
	P_{OUT} = +18 dBm, f_C +/-30 MHz		-48	-45	dBc
11g Spectral Mask	P_{OUT} = +19.5 dBm, f_C +/-11 MHz		-23	-20	dBc
	P_{OUT} = +19.5 dBm, f_C +/-20 MHz		-30	-25	dBc
	P_{OUT} = +19.5 dBm, f_C +/-30 MHz		-43	-40	dBc
11b Spectral Mask	P_{OUT} = +21.5 dBm, f_C +/-11 MHz		-34	-32	dBc
	P_{OUT} = +21.5 dBm, f_C +/-22 MHz		-54	-52	dBc
Gain		21	24	27.5	dB
Gain Variance Slope	Across any 40MHz Channel	-1		+1	dB
	Across any 20MHz Channel	-0.5		+0.5	dB

Parameter	Conditions	Min.	Typ.	Max.	Units
	Any 100MHz bandwidth	-2		+2	dB
Out of Band Gain	*f* = 1600-1660MHz			-12	dBc
TX2 Port Return Loss		8	12		dB
ANT2 Port Return Loss			12		dB
Isolation	ANT2-BT		18		
	ANT2-RX2		35		
FEM Leakage Current	RF Off, V_{CC} = 4.8V		5		µA
Operating Current	P_{OUT} = +19.5dBm		190	230	mA
2nd Harmonics	P_{OUT} = +21.5 dBm, 1Mbps DSSS BW = 1MHz, up to 3:1 load		-25	-22	dBm/MHz
3rd Harmonics	P_{OUT} = +21.5 dBm, 1Mbps DSSS BW = 1MHz, up to 3:1 load		-40		dBm/MHz
RECEIVE (ANT2-RX2) LNA ON MODE	**Unless otherwise noted: *f*=2412-2484MHz, V_{CC}=5V, T=+25ºC, BS=Low, C1=Low, C0=Low, SLP=High**				
Gain		10	12	15	dB
Gain Flatness	Across any 40 MHz Channel		0.25	+0.4	dB
Noise Figure			2	2.5	dB
RX2 Port Return Loss		6	10		dB
ANT2 Port Return Loss		5	8		dB
Isolation	ANT2-BT		21		
Input P_{1dB}		-10	-5		dBm
Input IP3			2		dBm
Rx Operating Current			10	13	mA
BLUETOOTH (ANT2-BT) MODE	**Unless otherwise noted: *f*=2412-2484MHz, V_{CC}=5V, T=+25ºC, *BS=Low, C1=Low, C0=High, SLP=High**				
Insertion Loss	P_{IN}/P_{OUT} > 20 dBm		0.7	0.9	dB
BT Port Return Loss			15		dB
ANT2 Port Return Loss			20		dB
Isolation	ANT2-RX2		35		dBm
GENERAL SPECIFICATIONS	**Unless otherwise noted: *f*=2412-2484MHz, V_{CC}=5V, T=+25ºC, Switching Time Power Accuracy +/-1dB**				
Control Current - High	LEN2		60	120	µA
Turn On/Off Time	10⇔90% of total gain or power off gain		200	800	nS
PA Stability - Output VSWR	No Spurious above -41.25dBm/MHz, P_{OUT} = 0 to 21 dBm, CW Signal		4:1		

Logic Truth Table

Mode #	Mode	PEN2	LEN2	PEN5	LEN5	CRX	CBT
0	All Off	Low	Low	Low	Low	Low	Low
1	Bluetooth	Low	Low	Low	Low	Low	High
2	Bluetooth & 5GHz Receive	Low	Low	Low	High	High	High
3	Bluetooth & 5GHz Transmit	Low	Low	High	Low	Low	High
4	2.4GHz Transmit	High	Low	Low	Low	Low	Low
5	2.4GHz Receive	Low	High	Low	Low	High	Low
6	5GHz Transmit	Low	Low	High	Low	Low	Low
7	5GHz Receive	Low	Low	Low	High	High	Low
8	5GHz Receive & 2.4GHz Receive	Low	High	Low	High	High	Low

Notes:

Evaluation Board Schematic

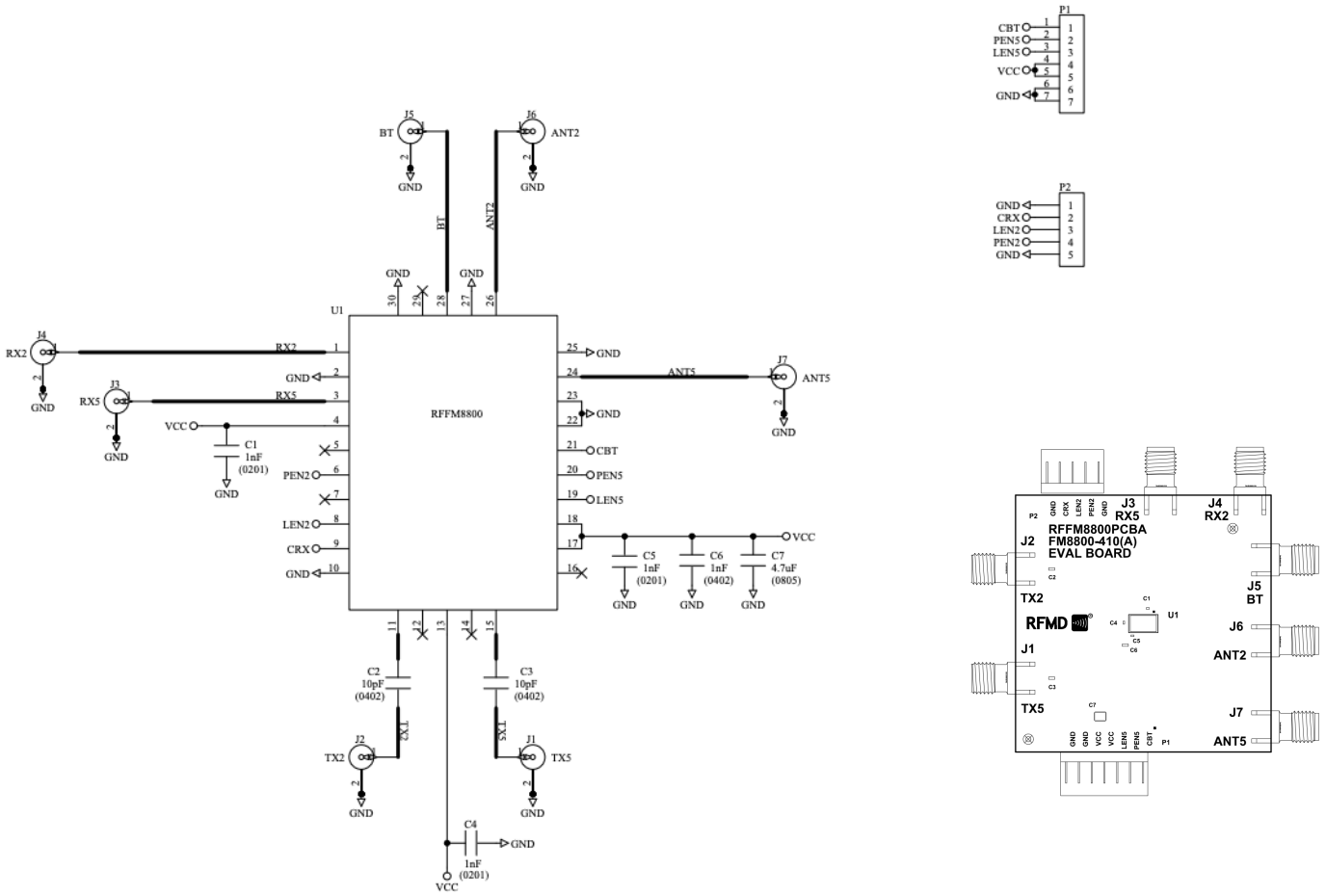

Bill of Material

Ref. Des.	Value	Description	Manuf.	Part number
-	-	Printed Circuit Board		
U1	-	Dualband Wi-Fi Front End Module	Qorvo	RFFM8800
C1, C2, C3, C4, C5, C7, C8, C11	1000 pF	Capacitor, Chip, 10%, 50V, X7R, 0402	Murata	GRM155R71H102KA01D
C10, C12, C14, C15, C16, C17, C18	10 pF	Capacitor, Chip, 5%, 50V, C0G, 0402	Murata	GRM1555C1H100JA01D
C13	1 µF	Capacitor, Chip, 10%, 6.3V, X5R, 0402	Murata	GRM155R60J105KE19D
C200	0.1 µF	Capacitor, Chip, 10%, 25V, X7R, 0603	Kernet	C0603C104K3RAC
C27, C28	4.7 µF	Capacitor, Chip, 10%, 10V, X5R, 1206	Murata	GRM31CR61A475KA01L
R50	3K Ω	Resistor, Chip, 5%, 1/10W, 0805	Panasonic	ERJ-6GEYJ302
R51, R52	10K Ω	Resistor, Chip, 5%, 1/10W, 0805	Panasonic	ERJ-6GEYJ103
C9, C19, C20, C21, C22, C23, C24	-	Do Not Install		

Pin Configuration and Description

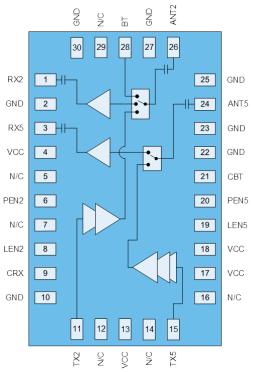

Pin Number	Label	Description
1	RX2	2.4GHz RF output from the low noise amplifier. Internally matched to 50 Ω
2	GND	Ground connection
3	RX5	5GHz RF output from the low noise amplifier. Internally matched to 50 Ω
4	VCC	Supply voltage
5	NC	No electrical connection
6	PEN2	Control pin
7	NC	No electrical connection
8	LEN2	Control pin
9	CRX	Control pin
10	GND	Ground connection
11	TX2	RF input. Internally matched to 50 Ω and DC blocked.
12	NC	No electrical connection
13	VCC	Supply voltage
14	NC	No electrical connection
15	TX5	RF input. Internally matched to 50 Ω and DC blocked.
16	NC	No electrical connection
17	VCC	Supply voltage
18	VCC	Supply voltage
19	LEN5	Control pin
20	PEN5	Control pin
21	CBT	Control pin
22	GND	Ground connection
23	GND	Ground connection
24	ANT5	RF bi-directional antenna port. Internally matched to 50 Ω.
25	GND	Ground connection
26	ANT2	RF bi-directional antenna port. Internally matched to 50 Ω.
27	GND	Ground connection
28	BT	Bi-directional 2.4GHz RF input and output. Internally matched to 50 Ω
29	NC	No electrical connection
30	GND	Ground connection
Pkg Base	GND	RF/DC ground. Use recommended via pattern to minimize inductance and thermal resistance. See PCB Mounting Pattern for suggested footprint.

Mechanical Information

Dimensions and PCB Mounting Pattern

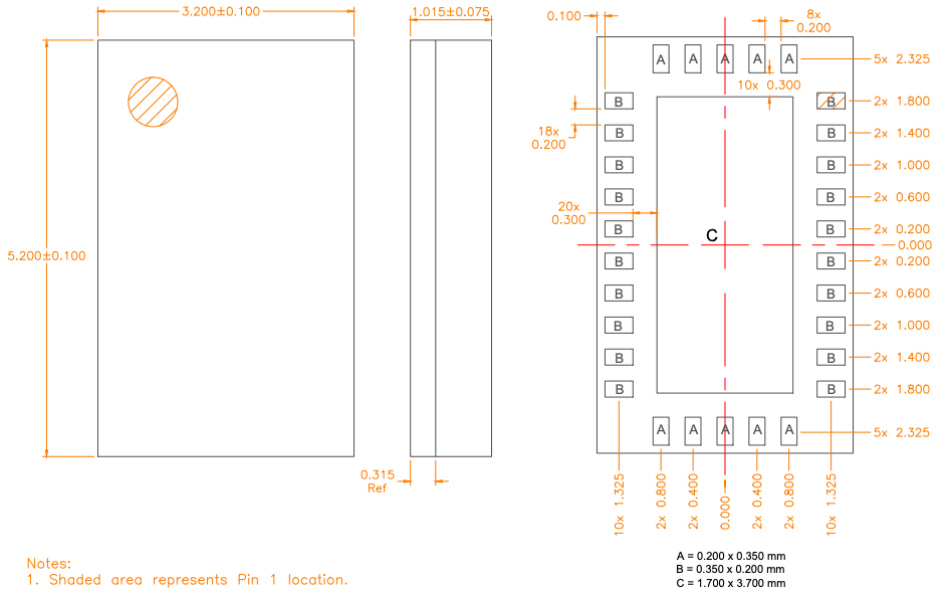

Notes:
1. Shaded area represents Pin 1 location.

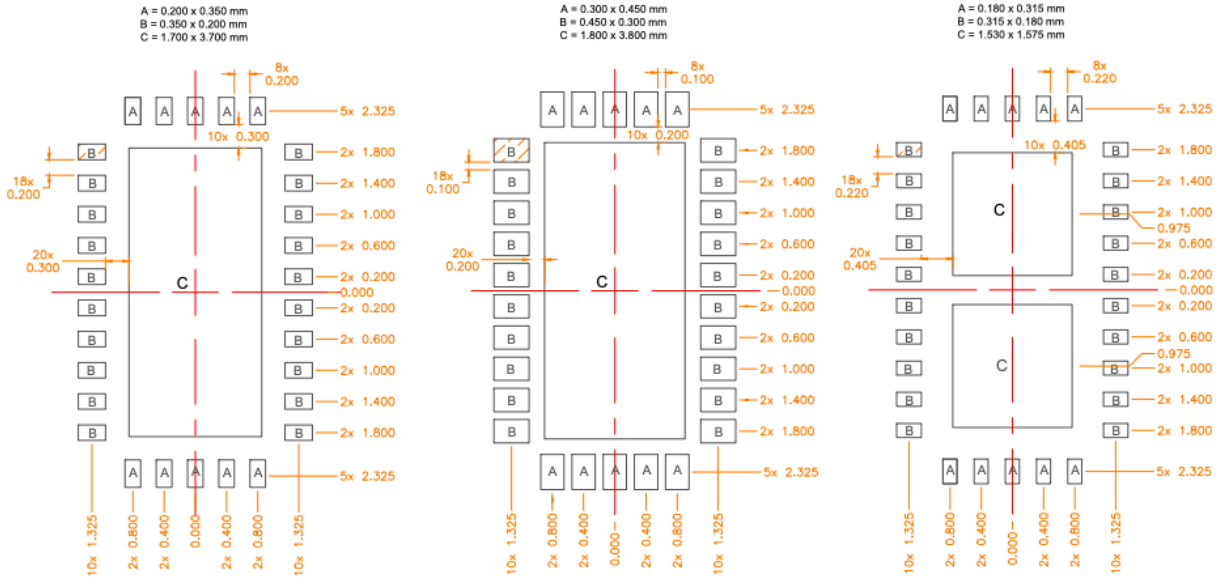

PCB Metal Land Pattern

PCB Solder Mask Pattern

PCB Stencil Pattern

Notes:
1. Shaded area represents Pin 1 location.

Notes:
1. All dimensions are in millimeters. Angles are in degrees.
2. Dimension and tolerance formats conform to ASME Y14.4M-1994.
3. The terminal #1 identifier and terminal numbering conform to JESD 95-1 SPP-012.

Handling Precautions

Parameter	Rating	Standard
ESD – Human Body Model (HBM)	500V – RF Pins 1000V – DC Pins	JESD22-A144
ESD – Charged Device Model (CDM)	III (500V)	JESD22-C101C
MSL – Moisture Sensitivity Level	Level 3	IPC/JEDEC J-STD-020

Caution!

ESD sensitive device

Solderability

Compatible with both lead-free (260 °C max. reflow temperature) and tin/lead (245 °C max. reflow temperature) soldering processes.

Package lead plating: Electrolytic plated Au over Ni

RoHS Compliance

This part is compliant with the 2011/65/EU RoHS directive (Restrictions on the Use of Certain Hazardous Substances in Electrical and Electronic Equipment), as amended by Directive 2015/863/EU.

This product also has the following attributes:

- Lead free
- Halogen Free (Chlorine, Bromine)
- Antimony Free
- TBBP-A ($C_{15}H_{12}Br_4O_2$) Free
- SVHC Free

Contact Information

For the latest specifications, additional product information, worldwide sales and distribution locations:

Web: www.qorvo.com

Tel: 1-844-890-8163

Email: customer.support@qorvo.com

Important Notice

The information contained herein is believed to be reliable; however, Qorvo makes no warranties regarding the information contained herein and assumes no responsibility or liability whatsoever for the use of the information contained herein. All information contained herein is subject to change without notice. Customers should obtain and verify the latest relevant information before placing orders for Qorvo products. The information contained herein or any use of such information does not grant, explicitly or implicitly, to any party any patent rights, licenses, or any other intellectual property rights, whether with regard to such information itself or anything described by such information. **THIS INFORMATION DOES NOT CONSTITUTE A WARRANTY WITH RESPECT TO THE PRODUCTS DESCRIBED HEREIN, AND QORVO HEREBY DISCLAIMS ANY AND ALL WARRANTIES WITH RESPECT TO SUCH PRODUCTS WHETHER EXPRESS OR IMPLIED BY LAW, COURSE OF DEALING, COURSE OF PERFORMANCE, USAGE OF TRADE OR OTHERWISE, INCLUDING THE IMPLIED WARRANTIES OF MERCHANTABILITY AND FITNESS FOR A PARTICULAR PURPOSE.**
Without limiting the generality of the foregoing, Qorvo products are not warranted or authorized for use as critical components in medical, life-saving, or life-sustaining applications, or other applications where a failure would reasonably be expected to cause severe personal injury or death.

Copyright 2019 © Qorvo, Inc. | Qorvo is a registered trademark of Qorvo, Inc.

Компания «ЭлектроПласт» предлагает заключение долгосрочных отношений при поставках импортных электронных компонентов на взаимовыгодных условиях!

Наши преимущества:

- Оперативные поставки широкого спектра электронных компонентов отечественного и импортного производства напрямую от производителей и с крупнейших мировых складов;
- Поставка более 17-ти миллионов наименований электронных компонентов;
- Поставка сложных, дефицитных, либо снятых с производства позиций;
- Оперативные сроки поставки под заказ (от 5 рабочих дней);
- Экспресс доставка в любую точку России;
- Техническая поддержка проекта, помощь в подборе аналогов, поставка прототипов;
- Система менеджмента качества сертифицирована по Международному стандарту ISO 9001;
- Лицензия ФСБ на осуществление работ с использованием сведений, составляющих государственную тайну;
- Поставка специализированных компонентов (Xilinx, Altera, Analog Devices, Intersil, Interpoint, Microsemi, Aeroflex, Peregrine, Syfer, Eurofarad, Texas Instrument, Miteq, Cobham, E2V, MA-COM, Hittite, Mini-Circuits,General Dynamics и др.);

Помимо этого, одним из направлений компании «ЭлектроПласт» является направление «Источники питания». Мы предлагаем Вам помощь Конструкторского отдела:

- Подбор оптимального решения, техническое обоснование при выборе компонента;
- Подбор аналогов;
- Консультации по применению компонента;
- Поставка образцов и прототипов;
- Техническая поддержка проекта;
- Защита от снятия компонента с производства.

Как с нами связаться

Телефон: 8 (812) 309 58 32 (многоканальный)
Факс: 8 (812) 320-02-42
Электронная почта: org@eplast1.ru
Адрес: 198099, г. Санкт-Петербург, ул. Калинина, дом 2, корпус 4, литера А.