Dual Precision, Low Power BiFET Op Amp

AD648

FEATURES

DC Performance
- 400 μA max Quiescent Current
- 10 pA max Bias Current, Warmed Up (AD648B)
- 1 μV max Offset Voltage (AD648B)
- 10 μV/°C max Drift (AD648B)
- 2 μV p-p Noise, 0.1 Hz to 10 Hz

AC Performance
- 1.8 V/μs Slew Rate
- 1 MHz Unity Gain Bandwidth

Available in Plastic Mini-DIP, CERDIP, and Plastic SOIC Packages

MIL-STD-883B Parts Available

Surface Mount (SOIC) Package Available in Tape and Reel in Accordance with EIA-481A Standard

Single Version: AD548

CONNECTION DIAGRAM

Plastic Mini-Dip (N) Package, Plastic SOIC (R) Package and CERDIP (Q) Package

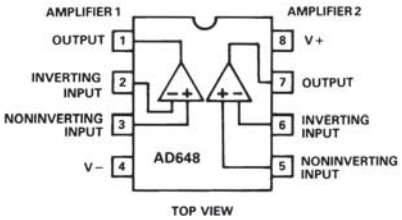

PRODUCT DESCRIPTION

The AD648 is a matched pair of low power, precision monolithic operational amplifiers. It offers both low bias current (10 pA max, warmed up) and low quiescent current (400 μA max) and is fabricated with ion-implanted FET and laser wafer trimming technologies. Input bias current is guaranteed over the AD648's entire common-mode voltage range.

The economical J grade has a maximum guaranteed offset voltage of less than 2 mV and an offset voltage drift of less than 20 μV/°C. This level of dc precision is achieved using Analog's laser wafer drift trimming process. The combination of low quiescent current and low offset voltage drift minimizes changes in input offset voltage due to self-heating effects. Five grades are offered over the commercial, industrial and military temperature ranges.

The AD648 is recommended for any dual supply op amp application requiring low power and excellent dc and ac performance. In applications such as battery-powered, precision instrument front ends and CMOS DAC buffers, the AD648's excellent combination of low input offset voltage and drift, low bias current, and low 1/f noise reduces output errors. High common-mode rejection (82 dB, min on the "B" grade) and high open-loop gain ensures better than 12-bit linearity in high impedance, buffer applications.

The AD648 is pinned out in a standard dual op amp configuration and is available in seven performance grades. The AD648J and AD648K are rated over the commercial temperature range of 0°C to 70°C. The AD648 and AD648B are rated over the industrial temperature range of –40°C to +85°C. The AD648S and AD648T are rated over the military temperature range of –55°C to +125°C and the AD648T* grade is available processed to MIL-STD-883B, Rev. C.

The AD648 is available in an 8-lead plastic mini-DIP, CERDIP, and SOIC.

*Not for new design, obsolete April 2002.

PRODUCT HIGHLIGHTS

1. A combination of low supply current, excellent dc and ac performance and low drift makes the AD648 the ideal op amp for high performance, low power applications.
2. The AD648 is pin compatible with industry standard dual op amps such as the LF442, TL062, and AD642, enabling designers to improve performance while achieving a reduction in power dissipation of up to 85%.
3. Guaranteed low input offset voltage (2 mV max) and drift (20 μV/°C max) for the AD648J are achieved using Analog Devices' laser drift trimming technology.
4. Analog Devices specifies each device in the warmed-up condition, insuring that the device will meet its published specifications in actual use.
5. Matching characteristics are excellent for all grades. The input offset voltage matching between amplifiers in the AD648J is within 2 mV.
6. Crosstalk between amplifiers is less than –120 dB at 1 kHz.

REV. E

Information furnished by Analog Devices is believed to be accurate and reliable. However, no responsibility is assumed by Analog Devices for its use, nor for any infringements of patents or other rights of third parties that may result from its use. No license is granted by implication or otherwise under any patent or patent rights of Analog Devices.

One Technology Way, P.O. Box 9106, Norwood, MA 02062-9106, U.S.A.
Tel: 781/329-4700 www.analog.com
Fax: 781/326-8703
© Analog Devices, Inc., 2002

AD648–SPECIFICATIONS (@ + 25°C and V_S = ±15 V dc, unless otherwise noted.)

Model	AD648J/A/S Min	AD648J/A/S Typ	AD648J/A/S Max	AD648K/B/T Min	AD648K/B/T Typ	AD648K/B/T Max	Unit
INPUT OFFSET VOLTAGE[1]							
Initial Offset		0.75	2.0		0.3	1.0	
T_{MIN} to T_{MAX}			3.0/3.0/3.0			1.5/1.5/2.0	mV
vs. Temperature			20			10	µV/°C
vs. Supply	80			86			dB
vs. Supply, T_{MIN} to T_{MAX}	76/76/76			80			dB
Long-Term Offset Stability		15			15		µV/month
INPUT BIAS CURREN							
Either Input,[2] V_{CM} = 0		5	20		3	10	pA
Either Input[2] at T_{MAX}, V_{CM} = 0			0.45/1.3/20			0.25/0.65/10	nA
Max Input Bias Current Over Common-Mode Voltage Range			30			15	pA
Offset Current, V_{CM} = 0		5	10		2	5	pA
Offset Current at T_{MAX}			0.25/0.7/10			0.15/0.35/5	nA
MATCHING CHARACTERISTICS[3]							
Input Offset Voltage		1.0	2.0		0.5	1.0	mV
Input Offset Voltage T_{MIN} to T_{MAX}			3.0/3.0/3.0			1.5/1.5/2.0	mV
Input Offset Voltage vs. Temperature		8			5		µV/°C
Input Bias Current			10			5	pA
Crosstalk		–120			–120		dB
INPUT IMPEDANCE							
Differential		$1 \times 10^{12}\|3$			$1 \times 10^{12}\|3$		Ω‖pF
Common Mode		$3 \times 10^{12}\|3$			$3 \times 10^{12}\|3$		Ω‖pF
INPUT VOLTAGE RANGE							
Differential[4]		±20			±20		V
Common Mode	±11	±12		±11	±12		V
Common-Mode Rejection							
V_{CM} = ±10 V	76			82			dB
T_{MIN} to T_{MAX}	76/76/76			82			dB
V_{CM} = ±11 V	70			76			dB
T_{MIN} to T_{MAX}	70/70/70			76			dB
INPUT VOLTAGE NOISE							
Voltage 0.1 Hz to 10 Hz		2			2		µV p-p
f = 10 Hz		80			80		nV/√Hz
f = 100 Hz		40			40		nV/√Hz
f = 1 kHz		30			30		nV/√Hz
f = 10 kHz		30			30		nV/√Hz
INPUT CURRENT NOISE							
f = 1 kHz		1.8			1.8		fA/√Hz
FREQUENCY RESPONSE							
Unity Gain, Small Signal	0.8	1.0		0.8	1.0		MHz
Full Power Response		30			30		kHz
Slew Rate, Unity Gain	1.0	1.8		1.0	1.8		V/µs
Settling Time to ±0.01%		8			8		µs
OPEN-LOOP GAIN							
V_O = ±10 V, R_L ≥ 10 kΩ	300	1000		300	1000		V/mV
T_{MIN} to T_{MAX}, R_L ≥ 10 kΩ	300/300/300	700		300	700		V/mV
V_O = ±10 V, R_L ≥ 5 kΩ	150	500		150	500		V/mV
T_{MIN} to T_{MAX}, R_L ≥ 5 kΩ	150/150/150	300		150	300		V/mV

SPECIFICATIONS (Continued)

Model	AD648J/A/S Min	AD648J/A/S Typ	AD648J/A/S Max	AD648K/B/T Min	AD648K/B/T Typ	AD648K/B/T Max	Unit
OUTPUT CHARACTERISTICS							
Voltage @ $R_L \geq 10$ kΩ, T_{MIN} to T_{MAX}	±12/±12/±12		±13		±12	±13	V
Voltage @ $R_L \geq 5$ kΩ, T_{MIN} to T_{MAX}	±11/±11/±11		±12		±11	±12	V
Short Circuit Current		15			15		mA
POWER SUPPLY							
Rated Performance		±15			±15		V
Operating Range	±4.5		±18	±4.5		±18	V
Quiescent Current (Both Amplifiers)		340	400		340	400	μA
TEMPERATURE RANGE							
Operating, Rated Performance							
Commercial (0°C to 70°C)		AD648J			AD648K		
Industrial (–40°C to +85°C)		AD648A		AD648B			
Military (–55°C to +125°C)		AD648S		AD648T			
PACKAGE OPTIONS							
SOIC (R-8)		AD648JR			AD648KR		
Plastic (N-8)		AD648JN			AD648KN		
CERDIP (Q-8)		AD648AQ[5], AD648SQ[5]			AD648BQ[5], AD648TQ/883B[5]		
Tape and Reel		AD648JR-REEL, AD648JR-REEL7			AD648KR-REEL, AD648KR-REEL7		

NOTES

[1]Input Offset Voltage specifications are guaranteed after five minutes of operation at $T_A = 25°C$.

[2]Bias Current specifications are guaranteed maximum at either input after five minutes of operation at $T_A = 25°C$. For higher temperature, the current doubles every 10°C.

[3]Matching is defined as the difference between parameters of the two amplifiers.

[4]Defined as voltages between inputs, such that neither exceeds ±10 V from ground.

[5]Not for new design. Obsolete April 2002.

Specifications subject to change without notice.

ABSOLUTE MAXIMUM RATINGS[1]

Supply Voltage	±18 V
Internal Power Dissipation[2]	500 mW
Input Voltage[3]	±18 V
Output Short Circuit Duration	Indefinite
Differential Input Voltage	$+V_S$ and $-V_S$
Storage Temperature Range (Q, H)	–65°C to +150°C
(N, R)	–65°C to +125°C
Operating Temperature Range	
AD648J/K	0°C to 70°C
AD648A/B	–40°C to +85°C
AD648S/T	–55°C to +125°C
Lead Temperature Range (Soldering 60 sec)	300°C

NOTES

[1]Stresses above those listed under "Absolute Maximum Ratings" may cause permanent damage to the device. This is a stress rating only and functional operation of the device at these or any other conditions above those indicated in the operational section of this specification is not implied. Exposure to absolute maximum rating conditions for extended periods may affect device reliability.

[2]Thermal Characteristics:
8-Pin Plastic Package: θ_{JA} = 165°C/Watt
8-Pin CERDIP Package: θ_{JC} = 22°C/Watt; θ_{JA} = 110°C/Watt
8-Pin SOIC Package: θ_{JC} = 42°C/Wat; θ_{JA} = 160°C/Watt

[3]For supply voltages less than ±18 V, the absolute maximum input voltage is equal to the supply voltage.

CAUTION

ESD (electrostatic discharge) sensitive device. Electrostatic charges as high as 4000 V readily accumulate on the human body and test equipment and can discharge without detection. Although the AD648 features proprietary ESD protection circuitry, permanent damage may occur on devices subjected to high-energy electrostatic discharges. Therefore, proper ESD precautions are recommended to avoid performance degradation or loss of functionality.

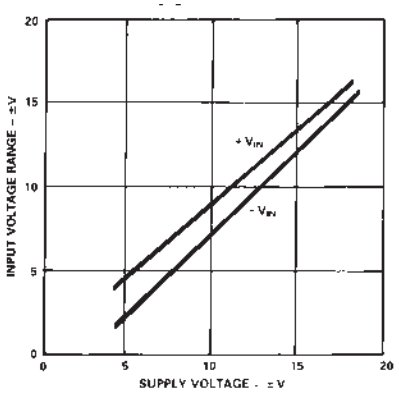

Figure 1. Input Voltage Range vs. Supply Voltage

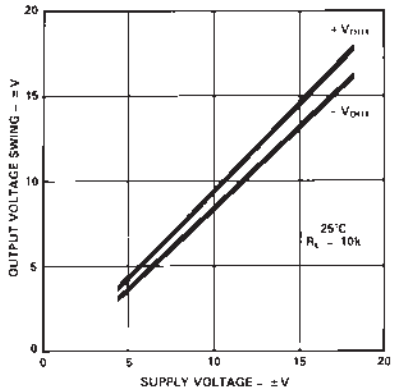

Figure 2. Output Voltage Swing vs. Supply Voltage

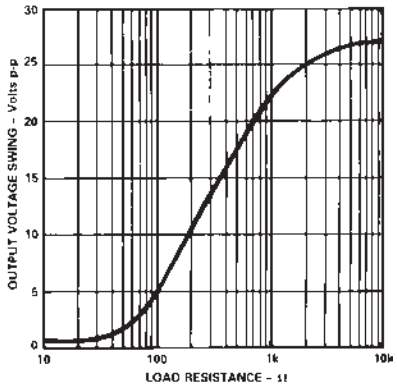

Figure 3. Output Voltage Swing vs. Load Resistance

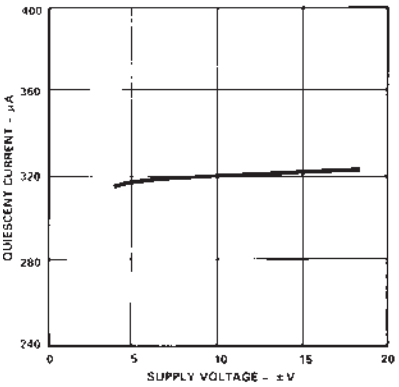

Figure 4. Quiescent Current vs. Supply Voltage

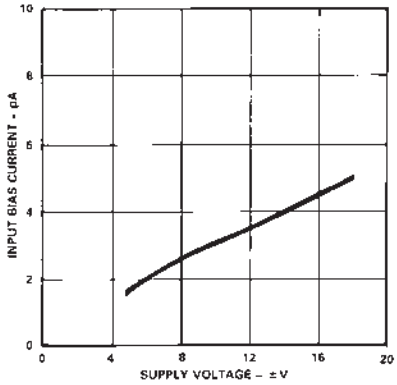

Figure 5. Input Bias Current vs. Supply Voltage

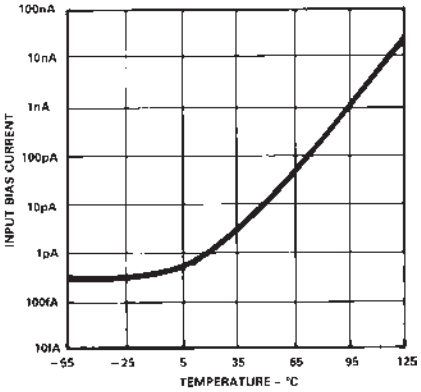

Figure 6. Input Bias Current vs. Temperature

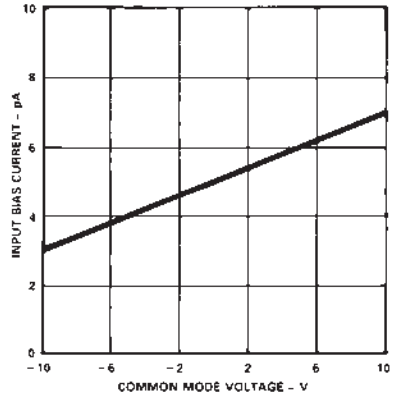

Figure 7. Input Bias Current vs. Common-Mode Voltage

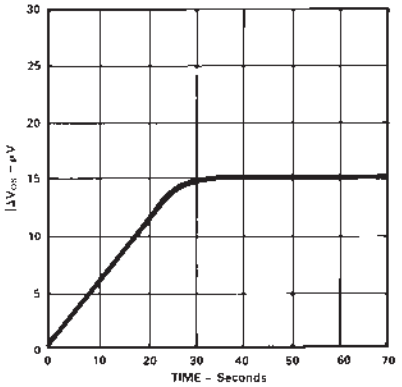

Figure 8. Change in Offset Voltage vs. Warm-Up Time

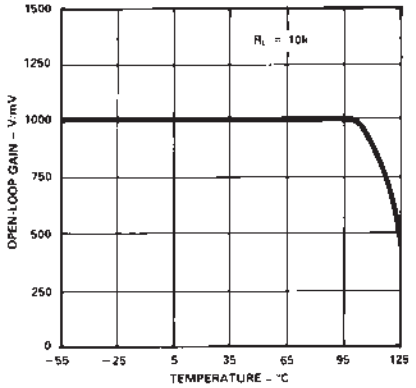

Figure 9. Open-Loop Gain vs. Temperature

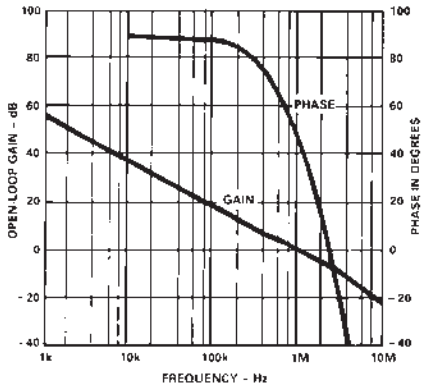

Figure 10. Open-Loop Frequency Response

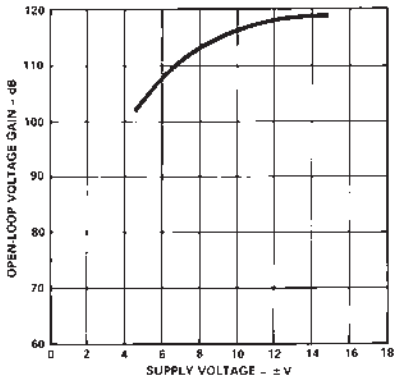

Figure 11. Open-Loop Voltage Gain vs. Supply Voltage

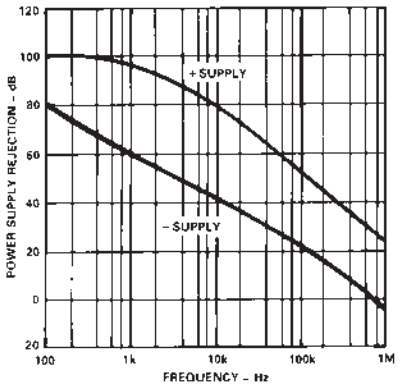

Figure 12. PSRR vs. Frequency

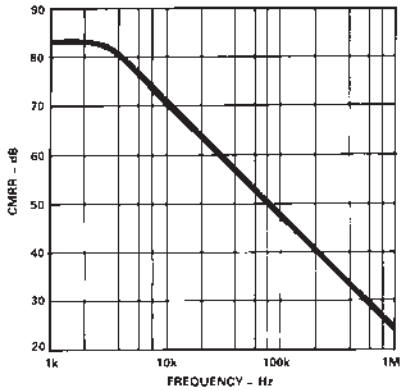

Figure 13. CMRR vs. Frequency

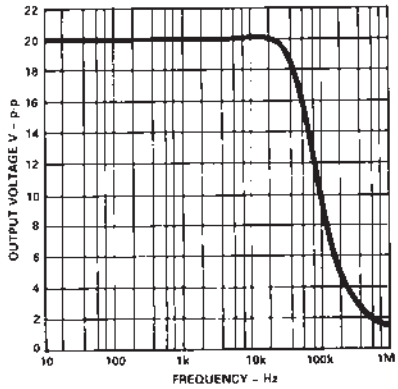

Figure 14. Large Signal Frequency Response

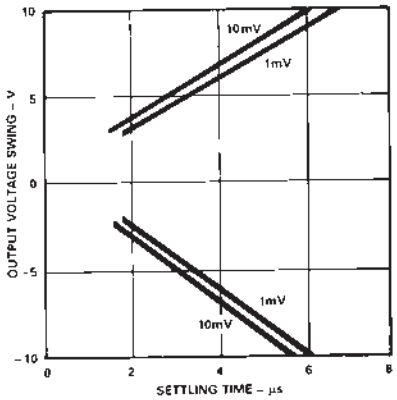

Figure 15. Output Swing and Error Voltage vs. Output Settling Time

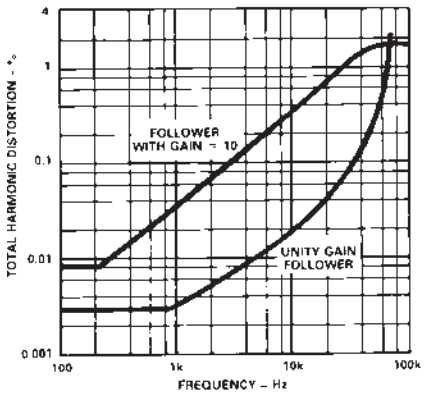

Figure 16. Total Harmonic Distortion vs. Frequency

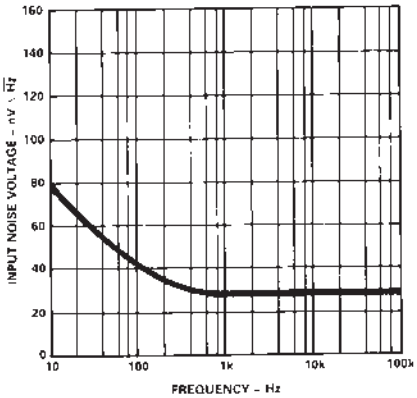

Figure 17. Input Noise Voltage Spectral Density

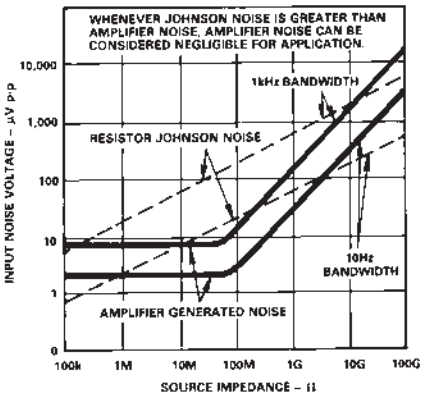

Figure 18. Total Noise vs. Source Impedance

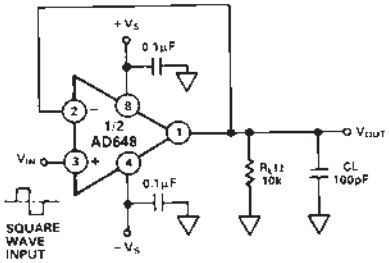

Figure 19a. Unity Gain Follower

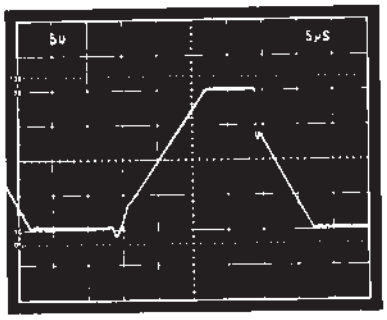

Figure 19b. Unity Gain Follower Pulse Response (Large Signal)

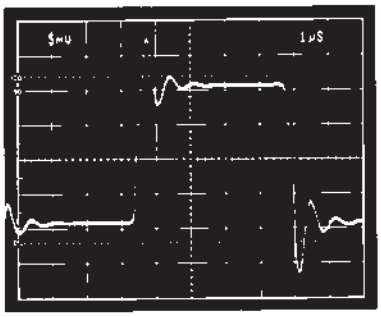

Figure 19c. Unity Gain Follower Pulse Response (Small Signal)

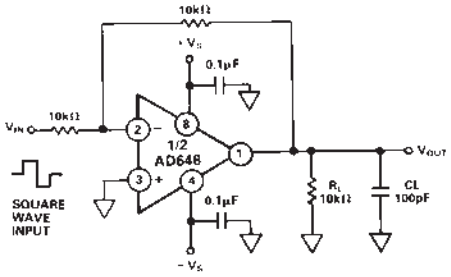

Figure 20a. Unity Gain Inverter

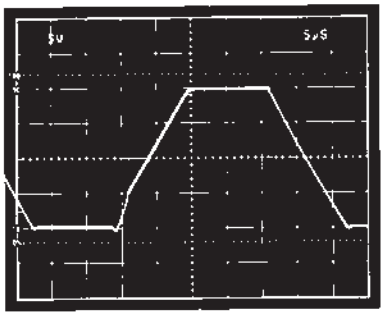

Figure 20b. Unity Gain Inverter Pulse Response (Large Signal)

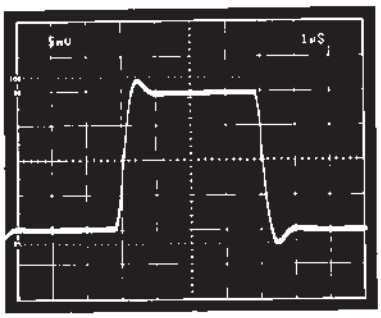

Figure 20c. Unity Gain Inverter Pulse Response (Small Signal)

APPLICATION NOTES

The AD648 is a pair of JFET-input op amps with a guaranteed maximum I_B of less than 10 pA, and offset and drift laser-trimmed to 1.0 mV and 10 µV/°C, respectively (AD648B). AC specs include 1 MHz bandwidth, 1.8 V/µs typical slew rate and 8 µs settling time for a 20 V step to ±0.01%—all at a supply current less than 400 µA. To capitalize on the device's performance, a number of error sources should be considered.

The minimal power drain and low offset drift of the AD648 reduce self-heating or "warm-up" effects on input offset voltage, making the AD648 ideal for on/off battery powered applications. The power dissipation due to the AD648's 400 µA supply current has a negligible effect on input current, but heavy output loading will raise the chip temperature. Since a JFET's input current doubles for every 10°C rise in chip temperature, this can be a noticeable effect.

The amplifier is designed to be functional with power supply voltages as low as ±4.5 V. It will exhibit a higher input offset voltage than at the rated supply voltage of ±15 V, due to power supply rejection effects. Common-mode range extends from 3 V more positive than the negative supply to 1 V more negative than the positive supply. Designed to cleanly drive up to 10 kΩ and 100 pF loads, the AD648 will drive a 2 kΩ load with reduced open-loop gain.

Figure 21 shows the recommended crosstalk test circuit. A typical value for crosstalk is –120 dB at 1 kHz.

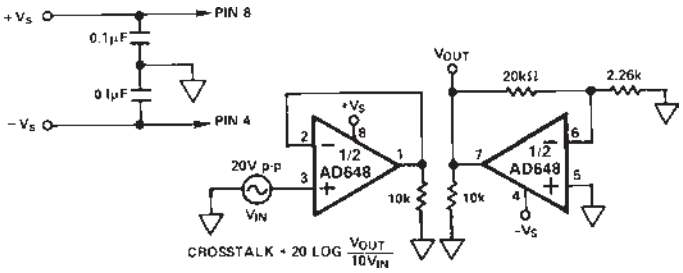

Figure 21. Crosstalk Test Circuit

LAYOUT

To take full advantage of the AD648's 10 pA max input current, parasitic leakages must be kept below an acceptable level. The practical limit of the resistance of epoxy or phenolic circuit board material is between 1×10^{12} Ω and 3×10^{12} Ω. This can result in an additional leakage of 5 pA between an input of 0 V and a –15 V supply line. Teflon or a similar low leakage material (with a resistance exceeding 10^{17} Ω) should be used to isolate high impedance input lines from adjacent lines carrying high voltages. The insulator should be kept clean, since contaminants will degrade the surface resistance.

A metal guard completely surrounding the high impedance nodes and driven by a voltage near the common-mode input potential can also be used to reduce some parasitic leakages. The guarding pattern in Figure 22 will reduce parasitic leakage due to finite board surface resistance; but it will not compensate for a low volume resistivity board.

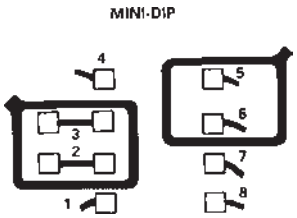

Figure 22. Board Layout for Guarding Inputs

INPUT PROTECTION

The AD648 is guaranteed to withstand input voltages equal to the power supply potential. Exceeding the negative supply voltage on either input will forward bias the substrate junction of the chip. The induced current may destroy the amplifier due to excess heat.

Input protection is required in applications such as a flame detector in a gas chromatograph, where a very high potential may be applied to the input terminals during a sensor fault condition. Figures 23a and 23b show simple current limiting schemes that can be used. $R_{PROTECT}$ should be chosen such that the maximum overload current is 1.0 mA (for example 100 kΩ for a 100 V overload).

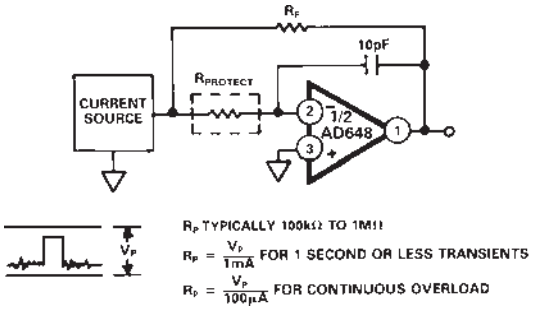

Figure 23a. Input Protection of I-to-V Converter

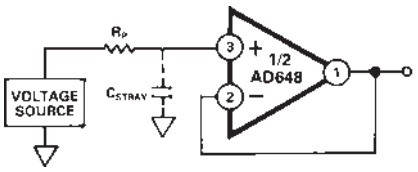

Figure 23b. Voltage Follower Input Protection Method

Figure 23b shows the recommended method for protecting a voltage follower from excessive currents due to high voltage breakdown. The protection resistor, R_P, limits the input current. A nominal value of 100 kΩ will limit the input current to less than 1 mA with a 100 volt input voltage applied.

The stray capacitance between the summing junction and ground will produce a high-frequency roll-off with a corner frequency equal to:

$$f_{corner} = \frac{1}{2\,\pi\,R_P\,C_{stray}}$$

Accordingly, a 100 kΩ value for R_P with a 3 pF C_{stray} will cause a 3 dB corner frequency to occur at 531 kHz.

Figure 23c shows a diode clamp protection scheme for an I-to-V converter using low leakage diodes. Because the diodes are connected to the op amp's summing junction, which is a virtual ground, their leakage contribution is minimal.

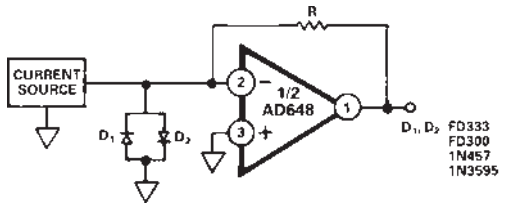

Figure 23c. I-to-V Converter with Diode Input Protection

Exceeding the negative common-mode range on either input terminal causes a phase reversal at the output, forcing the amplifier output to the corresponding high or low state. Exceeding the negative common mode on both inputs simultaneously forces the output high. Exceeding the positive common-mode range on a single input does not cause a phase reversal; but if both inputs exceed the limit, the output will be forced high. In all cases, normal amplifier operation is resumed when input voltages are brought back within the common-mode range.

D/A CONVERTER BIPOLAR OUTPUT BUFFER

The circuit in Figure 24 provides 4 quadrant multiplication with a resolution of 12 bits. The AD648 is used to convert the AD7545 CMOS DAC's output current to a voltage and provides the necessary level shifting to achieve a bipolar voltage output. The circuit operates with a 12-bit plus sign input code. The transfer function is shown in Figure 25.

The AD7592 is a fully protected dual CMOS SPDT switch with data latches. R4 and R5 should match to within 0.01% to maintain the accuracy of the converter. A mismatch between R4 and R5 introduces a gain error. Overall gain is trimmed by adjusting R_{IN}. The AD648's low input offset voltage, low drift over temperature, and excellent dynamics make it an attractive low power output buffer.

The input offset voltage of the AD648 output amplifier results in an output error voltage. This error voltage equals the input offset voltage of the op amp times the noise gain of the amplifier.

That is:

$$V_{OS}\ Output = V_{OS}\ Input\left(1+\frac{R_{FB}}{R_O}\right)$$

R_{FB} is the feedback resistor for the op amp, which is internal to the DAC. R_O is the DAC's R-2R ladder output resistance. The value of R_O is code dependent. This has the effect of changing the offset error voltage at the amplifier's output. An output amplifier with a sub millivolt input offset voltage is needed to preserve the linearity of the DAC's transfer function.

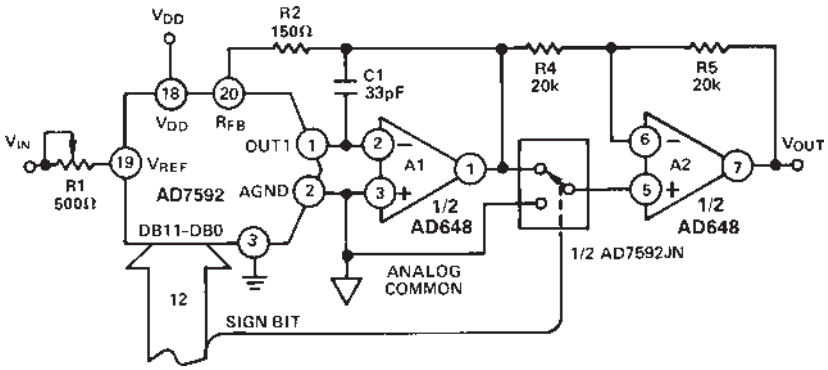

Figure 24. 12-Bit Plus Sign Magnitude D/A Converter

SIGN BIT	BINARY NUMBER IN DAC REGISTER	ANALOG OUTPUT
0	1111 1111 1111	$+V_{IN} \times (4095/4096)$
0	0000 0000 0000	0 V
1	0000 0000 0000	0 V
1	1111 1111 1111	$-V_{IN} \times (4095/4096)$

NOTE
SIGN BIT AT "0" CONNECTS THE NONINVERTING INPUT OF A2 TO ANALOG COMMON

Figure 25. Sign Magnitude Code Table

The AD648 in this configuration provides a 700 kHz small signal bandwidth and 1.8 V/µs typical slew rate. The 33 pF capacitor across the feedback resistor optimizes the circuit's response. The oscilloscope photos in Figures 26a and 26b show small and large signal outputs of the circuit in Figure 24. Upper traces show the input signal V_{IN}. Lower traces are the resulting output voltage with the DAC's digital input set to all 1s. The circuit settles to ±0.01% for a 20 V input step in 14 µs.

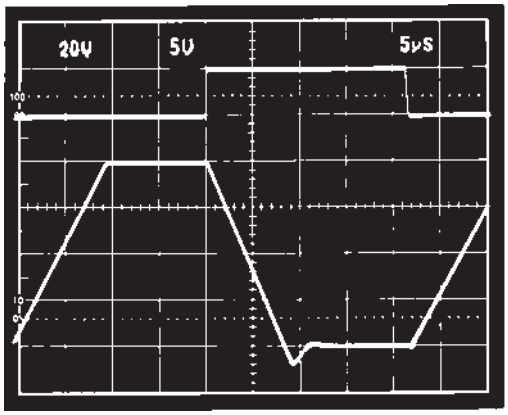

Figure 26a. Response to ±20 V p-p Reference Square Wave

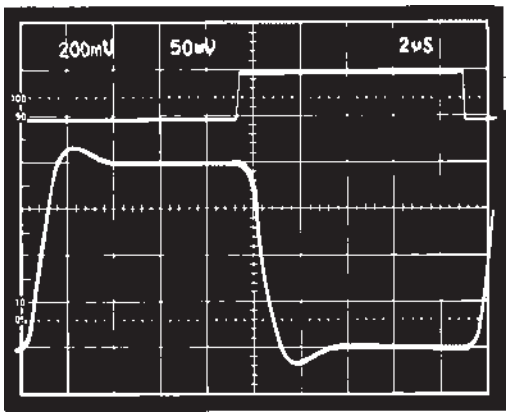

Figure 26b. Response to ±100 mV p-p Reference Square Wave

DUAL PHOTODIODE PREAMP

The performance of the dual photodiode preamp shown in Figure 27 is enhanced by the AD648's low input current, input voltage offset, and offset voltage drift. Each photodiode sources a current proportional to the incident light power on its surface. R_F converts the photodiode current to an output voltage equal to $R_F \times I_S$.

An error budget illustrating the importance of low amplifier input current, voltage offset, and offset voltage drift to minimize output voltage errors can be developed by considering the equivalent circuit for the small (0.2 mm^2 area) photodiode shown in Figure 27. The input current results in an error proportional to the feedback resistance used. The amplifier's offset will produce an error proportional to the preamp's noise gain ($1+R_F/R_{SH}$), where R_{SH} is the photodiode shunt resistance. The amplifier's input current will double with every 10°C rise in temperature, and the photodiode's shunt resistance halves with every 10°C rise. The error budget in Figure 28 assumes a room temperature photodiode R_{SH} of 500 MΩ, and the maximum input current and input offset voltage specs of an AD648C.

The capacitance at the amplifier's negative input (the sum of the photodiode's shunt capacitance, the op amp's differential input capacitance, stray capacitance due to wiring, etc.) will cause a rise in the preamp's noise gain over frequency. This can result in excess noise over the bandwidth of interest. C_F reduces the noise gain "peaking" at the expense of signal bandwidth.

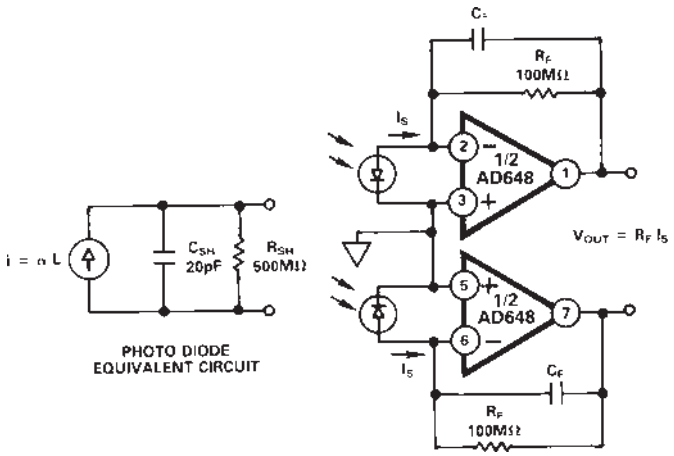

Figure 27. A Dual Photodiode Pre-Amp

TEMP °C	R_{SH} (MΩ)	V_{OS} (µV)	$(1 + R_F/R_{SH})\ V_{OS}$	I_B (pA)	I_BR_F	TOTAL
–25	15,970	150	151 µV	0.30	30 µV	181 µV
0	2,830	225	233 µV	2.26	262 µV	495 µV
+25	500	300	360 µV	10.00	1.0 mV	1.36 mV
+50	88.5	375	800 µV	56.6	5.6 mV	6.40 mV
+75	15.6	450	3.33 mV	320	32 mV	35.3 mV
+85	7.8	480	6.63 mV	640	64 mV	70.6 mV

Figure 28. Photodiode Pre-Amp Errors Over Temperature

INSTRUMENTATION AMPLIFIER

The AD648J's maximum input current of 20 pA per amplifier makes it an excellent building block for the high input impedance instrumentation amplifier shown in Figure 29. Total current drain for this circuit is under 600 µA. This configuration is optimal for conditioning differential voltages from high impedance sources.

The overall gain of the circuit is controlled by R_G, resulting in the following transfer function:

$$\frac{V_{OUT}}{V_{IN}} = 1 + \frac{(R3 + R4)}{R_G}$$

Gains of 1 to 100 can be accommodated with gain nonlinearities of less than 0.01%. The maximum input current is 30 pA over the common-mode range, with a common-mode impedance of over 1×10^{12} Ω. The capacitors C1, C2, C3 and C4 compensate for peaking in the gain over frequency which is caused by input capacitance.

To calibrate this circuit, first adjust trimmer R1 for common-mode rejection with 10 V dc applied to the input pins. Next, adjust R2 for zero offset at V_{OUT} with both inputs grounded. Trim the circuit a second time for optimal performance.

The –3 dB small signal bandwidth for this low power instrumentation amplifier is 700 kHz for a gain of 1 and 10 kHz for a gain of 100. The typical output slew rate is 1.8 V/µs.

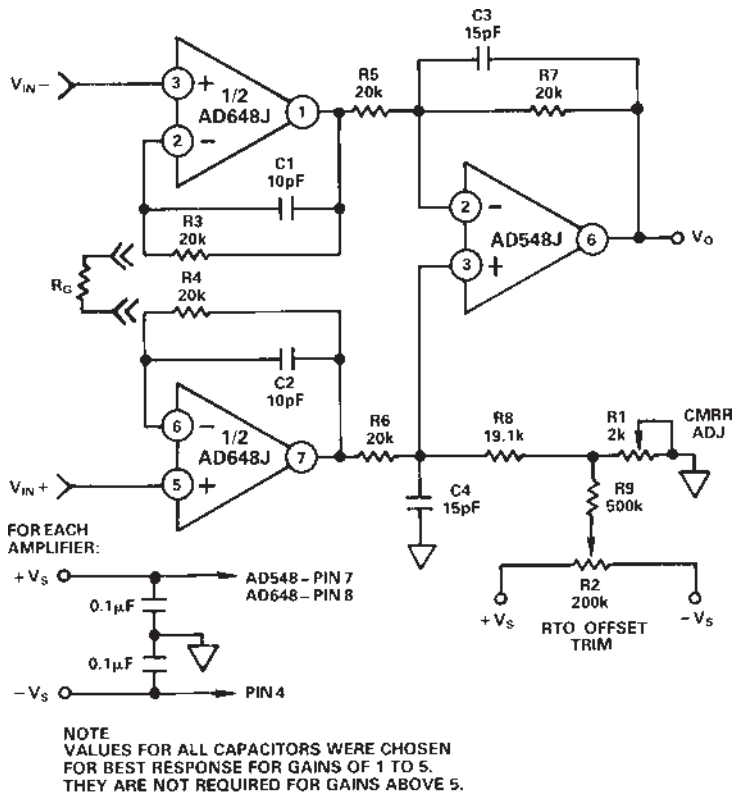

Figure 29. Low Power Instrumentation Amplifier

LOG RATIO AMPLIFIER

Log ratio amplifiers are useful for a variety of signal conditioning applications, such as linearizing exponential transducer outputs and compressing analog signals having a wide dynamic range. The AD648's picoamp level input current and low input offset voltage make it a good choice for the front end amplifier of the log ratio circuit shown in Figure 30. This circuit produces an output voltage equal to the log base 10 of the ratio of the input currents I_1 and I_2. Resistive inputs R1 and R2 are provided for voltage inputs.

Input currents I_1 and I_2 set the collector currents of Q1 and Q2, a matched pair of logging transistors. Voltages at points A and B are developed according to the following familiar diode equation:

$$V_{BE} = (kT/q)\ ln\ (I_C/I_{ES})$$

In this equation, k is Boltzmann's constant, T is absolute temperature, q is an electron charge, and I_{ES} is the reverse saturation current of the logging transistors. The difference of these two voltages is taken by the subtractor section and scaled by a factor of approximately 16 by resistors R9, R10, and R8. Temperature compensation is provided by resistors R8 and R15, which have a positive 3500 ppm/°C temperature coefficient. The transfer function for the output voltage is:

$$V_{OUT} = 1\ V\ log_{10}\ (I_2/I_1)$$

Frequency compensation is provided by R11, R12, C1, and C2. Small signal bandwidth is approximately 300 kHz at input currents above 100 µA and will proportionally decrease with lower signal levels. D1, D2, R13, and R14 compensate for the effects of the two logging transistors' ohmic emitter resistance.

To trim this circuit, set the two input currents to 10 µA and adjust V_{OUT} to zero by adjusting the potentiometer on A3. Then set I_2 to 1 µA and adjust the scale factor such that the output voltage is 1 V by trimming potentiometer R10. Offset adjustment for A1 and A2 is provided to increase the accuracy of the voltage inputs.

This circuit ensures a 1% log conformance error over an input current range of 300 pA to 1 mA, with low level accuracy limited by the AD648's input current. The low level input voltage accuracy of this circuit is limited by the input offset voltage and drift of the AD648.

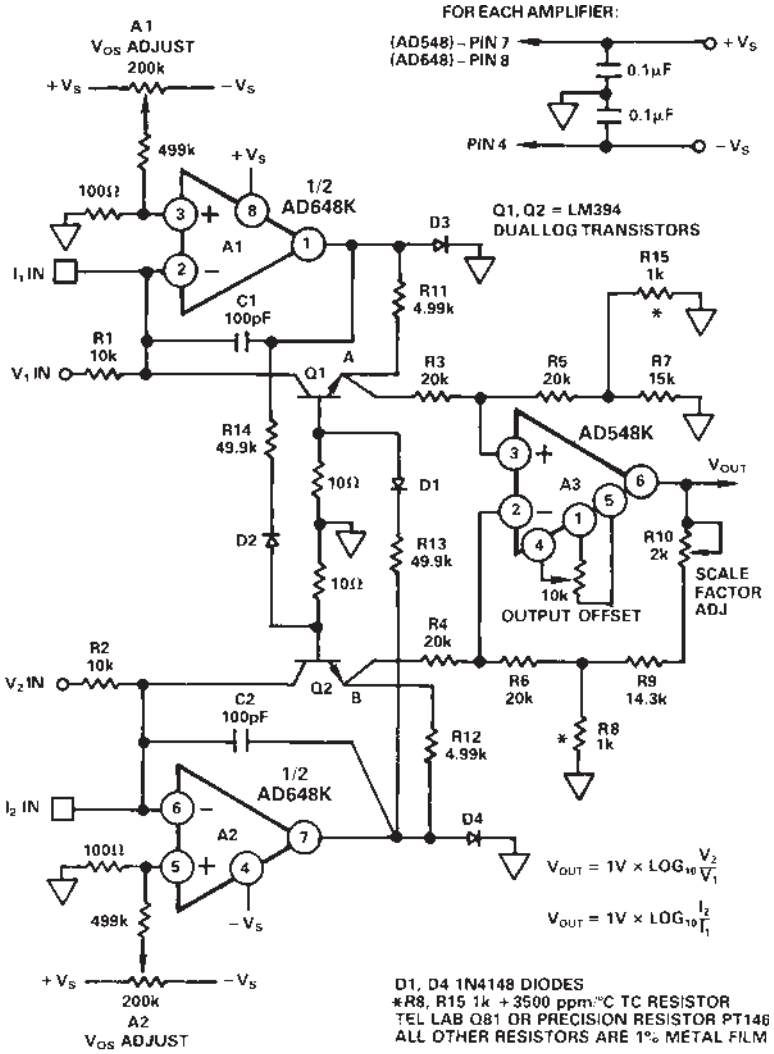

Figure 30. Precision Log Ratio Amplifier

OUTLINE DIMENSIONS

Mini-DIP (N) Package

Dimensions shown in inches and (millimeters)

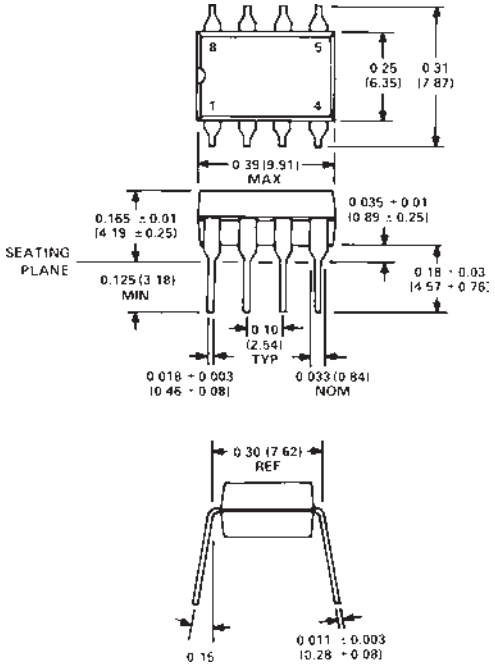

CERDIP (Q) Package

Dimensions shown in inches and (millimeters)

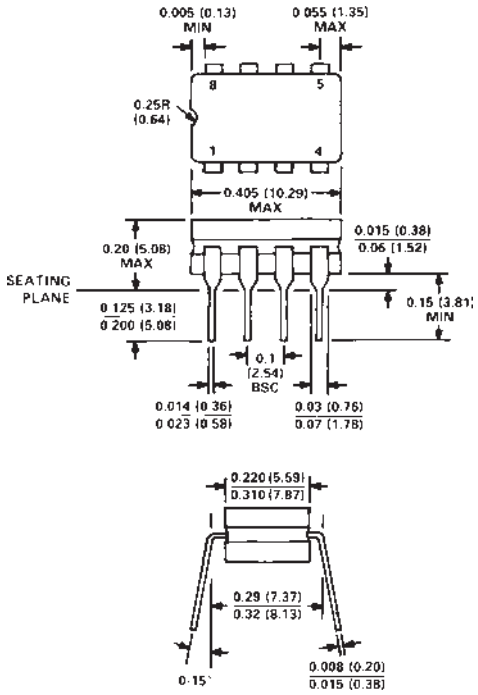

8-Lead SOIC (R) Package

Dimensions shown in millimeters and (inches)

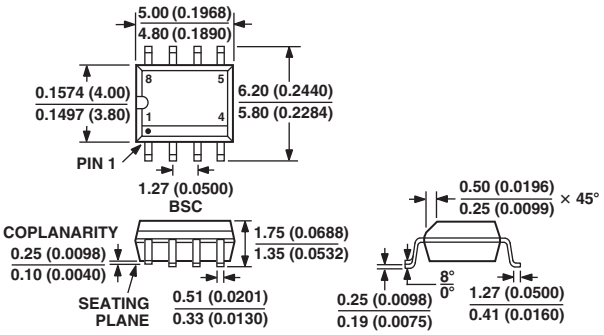

CONTROLLING DIMENSIONS ARE IN MILLIMETERS; INCH DIMENSIONS (IN PARENTHESES) ARE ROUNDED-OFF MILLIMETER EQUIVALENTS FOR REFERENCE ONLY AND ARE NOT APPROPRIATE FOR USE IN DESIGN

COMPLIANT TO JEDEC STANDARDS MS-012 AA

Revision History

Location	Page
Data Sheet changed from REV. C to REV. E.	
Change to SOIC (R-8) Package	12
Edits to FEATURES	1
Deleted Connection Diagram	1
Deleted AD648C column from SPECIFICATIONS	2
Deleted METALIZATION PHOTOGRAPH	3
Deleted Metal Can from Figure 22	6
Deleted TO-99 (H) from OUTLINE DIMENSIONS	11

C00795–0–5/02(E)

PRINTED IN U.S.A.

Компания «ЭлектроПласт» предлагает заключение долгосрочных отношений при поставках импортных электронных компонентов на взаимовыгодных условиях!

Наши преимущества:

- Оперативные поставки широкого спектра электронных компонентов отечественного и импортного производства напрямую от производителей и с крупнейших мировых складов;
- Поставка более 17-ти миллионов наименований электронных компонентов;
- Поставка сложных, дефицитных, либо снятых с производства позиций;
- Оперативные сроки поставки под заказ (от 5 рабочих дней);
- Экспресс доставка в любую точку России;
- Техническая поддержка проекта, помощь в подборе аналогов, поставка прототипов;
- Система менеджмента качества сертифицирована по Международному стандарту ISO 9001;
- Лицензия ФСБ на осуществление работ с использованием сведений, составляющих государственную тайну;
- Поставка специализированных компонентов (Xilinx, Altera, Analog Devices, Intersil, Interpoint, Microsemi, Aeroflex, Peregrine, Syfer, Eurofarad, Texas Instrument, Miteq, Cobham, E2V, MA-COM, Hittite, Mini-Circuits,General Dynamics и др.);

Помимо этого, одним из направлений компании «ЭлектроПласт» является направление «Источники питания». Мы предлагаем Вам помощь Конструкторского отдела:

- Подбор оптимального решения, техническое обоснование при выборе компонента;
- Подбор аналогов;
- Консультации по применению компонента;
- Поставка образцов и прототипов;
- Техническая поддержка проекта;
- Защита от снятия компонента с производства.

Как с нами связаться

Телефон: 8 (812) 309 58 32 (многоканальный)
Факс: 8 (812) 320-02-42
Электронная почта: org@eplast1.ru
Адрес: 198099, г. Санкт-Петербург, ул. Калинина, дом 2, корпус 4, литера А.