3M™ MetPak™ 2-FB Inverse Socket

2 mm 5-Row, Vertical, Solder or Press-Fit Tail

MP2 Series

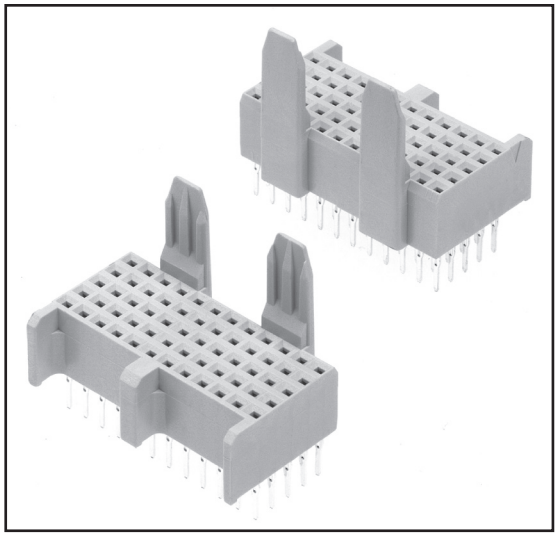

- Guiding alignment feature eliminates bent pins on backplane
- Footprint compatible with standard Futurebus+®
- Ideal for hot swapping
- End-to-end stackable
- Vertical socket on backplane
- Offset dual-beam contact minimizes insertion force
- Mates with MP2-P and MP2-PS Series
- Rear plug-up tails for midplane applications
- See the Regulatory Information Appendix (RIA) in the "RoHS compliance" section of www.3Mconnector.com for compliance information (RIA E1 & C1 apply)

Date Modified: May 13, 2010

Physical

Insulation:

Material: High Temp LCP

Flammability: UL 94V-0

Color: Beige

Contact:

Material: Copper Alloy

Plating:

Underplating: 50 μ" [1.27 μm) Nickel

Wiping Area: See Ordering Information

Solder Tails: See Ordering Information

Electrical

Current Rating: Signal: 1.5 A – All contacts simultaneously

Insulation Resistance: 10^3 MΩ

Withstanding Voltage: 1000 V_{AC}

Environmental

Temperature Rating: -55°C to +125°C

UL File No.: E68080

MetPak is a trademark of 3M Company.
Futurebus+ is a registered trademark of the Institute of Electrical and Electronic Engineers, Inc. (IEEE)

3M is a trademark of 3M Company.

For technical, sales or ordering information call
800-225-5373

3M™ MetPak™ 2-FB Inverse Socket

2 mm 5-Row, Vertical, Solder or Press-Fit Tail

MP2 Series

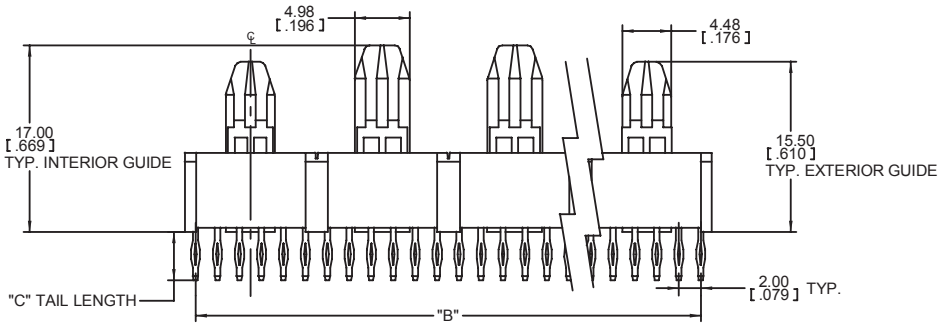

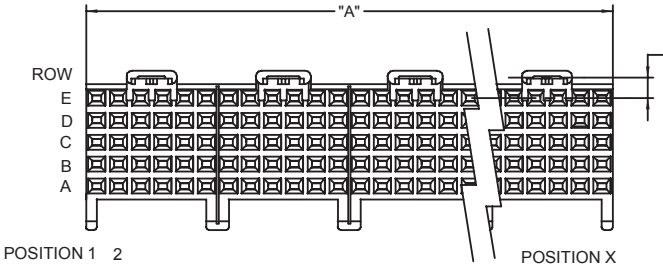

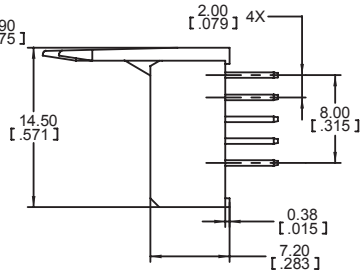

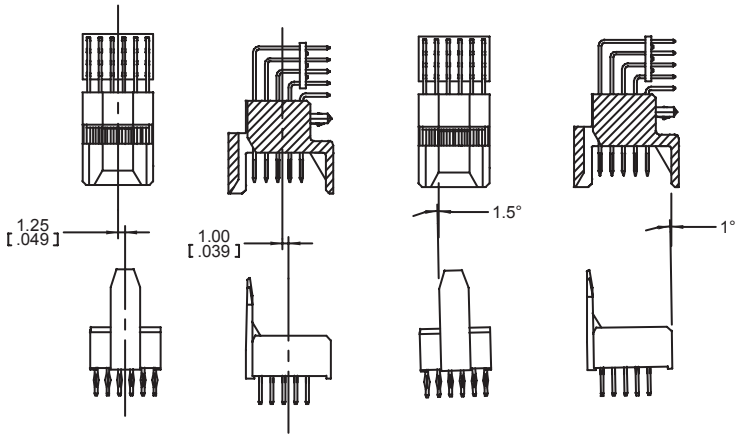

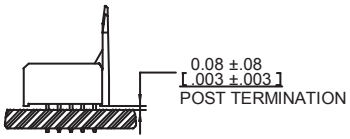

mm
[inch]

Tolerance Unless Noted			
	0	0.0	0.00
mm	±3	±0.3	±0.13

[ ] Dimensions for Reference Only

Notes:

1. For special contact loading pattern, contact 3M.
2. Refer to IEC 61076-4-104 Futurebus+® global standard.
3. "Press Fit" describes a contact tail having a compliant section designed to make a reliable electrical connection with a plated through-hole (PTH) in a printed circuit board, typically a "back plane."

Ordering Information

MP2 - RXXX - 5XXX - XXXXX

- R = Inverse Socket
- Contact Count (See Table 1)
- Rows: 5 = 5 Rows
- Loading Pattern: 1 = All rows filled; 2 = Rows A, B, C and D filled, Row E omitted
- Termination Style: P = Press-Fit; S = Solder Tail
- Tail Length (See Table 2)
- Plating Options (See Table 3)

TS-1121-B
Sheet 2 of 4

3M™ MetPak™ 2-FB Inverse Socket

2 mm 5-Row, Vertical, Solder or Press-Fit Tail

MP2 Series

Table 1 - Connector & Row Lengths				
Pin Count	Dim. "A" mm [inch]	Dim "B" mm [inch]	Rows	Block Count
030	11.95 [0.471]	10.00 [0.394]	5	1
060	23.95 [0.943]	22.00 [0.866]	5	2
090	35.95 [1.415]	34.00 [1.339]	5	3
120	47.95 [1.889]	46.00 [1.811]	5	4
150	59.95 [2.36]	58.00 [2.283]	5	5
180	71.95 [2.833]	70.00 [2.756]	5	6
210	83.95 [3.305]	82.00 [3.228]	5	7
240	95.95 [3.778]	94.00 [3.701]	5	8
270	107.95 [4.251]	106.00 [4.173]	5	9
300	119.95 [4.722]	118.00 [4.646	5	10

Table 2 - Tail Length		
Contact-to-PC Board Tail Termination Option No.		Dim. "C"
Solder	Press-Fit*	
1	1	4.35 [0.171]

*Compliant-Pin Tail

Table 3 - Plating & Regulatory			
Plating Suffix	Press-Fit Tails*	Solder Tails	Plating Composition
TG30	RIA E2 & C2 apply	RIA E3 & C2 apply	0.76 µm [30 µ"] Min. Au Contact Area 2.54 µm [100 µ"] Min. SnPb Tail Area 1.27 µm [50 µ"] Min. Ni all over
TR30	RIA E2 & C2 apply	RIA E3 & C2 apply	0.08 µm [3 µ"] Min. Au Contact Area 0.67 µm [27 µ"] Min. PdNi Contact Area 2.54 µm [100 µ"] Min. SnPb Tail Area 1.27 µm [50 µ"] Min. Ni all over
KR	RIA E1 & C1 apply	RIA E1 & C1 apply	0.76 µm [30 µ"] Min. Au Contact Area 2.54 µm [100 µ"] Min. Matt Whisker Mitigating Sn Tail Area 1.27 µm [50 µ"] Min. Ni all over
LR	RIA E1 & C1 apply	RIA E1 & C1 apply	0.08 µm [3 µ"] Min. Au Contact Area 0.67 µm [27 µ"] Min. PdNi Contact Area 2.54 µm [100 µ"] Min. Matt Whisker Mitigating Sn Tail Area 1.27 µm [50 µ"] Min. Ni all over

*Compliant-Pin Tail

3M
Electronic Solutions Division
Interconnect Solutions
http://www.3Mconnector.com

3M is a trademark of 3M Company.
For technical, sales or ordering information call
800-225-5373

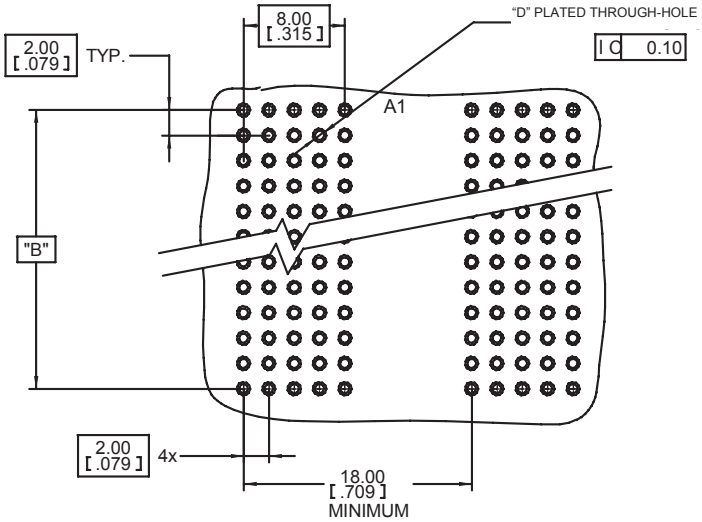

RECOMMENDED PRESS-FIT AND SOLDER TAIL PCB HOLE MOUNTING PATTERN

mm
[inch]

Tolerance Unless Noted		
	0.0	0.00
mm	±0.3	±0.25

[ ] Dimensions for Reference Only

Table 4 – HOLE PLATING For TG30 and TR30 FINISHES ONLY				
HOLE	**Finished Dia. MM [in]**	**Cu Thickness [mm [in]**	**SnPb Thickness microns [µ"]**	**Drilled Hole Dia. mm [in]**
"D"	0.65-0.80 [.0256-.0315]	0.025 [.001] min.	15 [600] max.	0.81-0.86 [.0319-.0339]

Table 5 – HOLE PLATING For KR and LR FINISHES ONLY						
HOLE	**Finished Dia. MM [in]**	**Cu Thickness [mm [in]**	**Immersion Matte Sn Thickness microns [µ"]**	**Electrolytic Au Thickness microns [µ"]**	**OSP ENTEK Thickness microns [µ"]**	**Drilled Hole Dia. mm [in]**
"D"	0.700-0.800 [.0276-.0315]	0.025-0.045 [0.001-0.002]	0.5 - 2.5 [20 - 100]	0.1 - 0.5 [4 - 20]	0.2 - 0.5 [8 - 20]	0.830-0.860 [.0330-.0340] or 0.85 mm [#66] TWIST DRILL

TS-1121-B
Sheet 4 of 4

Important Notice

All statements, technical information, and recommendations related to 3M's products are based on information believed to be reliable, but the accuracy or completeness is not guaranteed. Before using this product, you must evaluate it and determine if it is suitable for your intended application. You assume all risks and liability associated with such use. Any statements related to the product which are not contained in 3M's current publications, or any contrary statements contained on your purchase order shall have no force or effect unless expressly agreed upon, in writing, by an authorized officer of 3M.

Warranty; Limited Remedy; Limited Liability.

This product will be free from defects in material and manufacture for a period of ninety (90) days from the time of purchase. **3M MAKES NO OTHER WARRANTIES INCLUDING, BUT NOT LIMITED TO, ANY IMPLIED WARRANTY OF MERCHANTABILITY OR FITNESS FOR A PARTICULAR PURPOSE.** If this product is defective within the warranty period stated above, your exclusive remedy shall be, at 3M's option, to replace or repair the 3M product or refund the purchase price of the 3M product. **Except where prohibited by law, 3M will not be liable for any indirect, special, incidental or consequential loss or damage arising from this 3M product, regardless of the legal theory asserted.**

3M Electronics Solutions Division
6801 River Place Blvd.
Austin, TX 78726-9000
U.S.A.
1-800-225-5373
www.3Mconnector.com

Please recycle. Printed in USA.
© 3M 2010. All rights reserved.
RIA-2217B-E
3M is a trademark of 3M Company.

Компания «ЭлектроПласт» предлагает заключение долгосрочных отношений при поставках импортных электронных компонентов на взаимовыгодных условиях!

Наши преимущества:

- Оперативные поставки широкого спектра электронных компонентов отечественного и импортного производства напрямую от производителей и с крупнейших мировых складов;
- Поставка более 17-ти миллионов наименований электронных компонентов;
- Поставка сложных, дефицитных, либо снятых с производства позиций;
- Оперативные сроки поставки под заказ (от 5 рабочих дней);
- Экспресс доставка в любую точку России;
- Техническая поддержка проекта, помощь в подборе аналогов, поставка прототипов;
- Система менеджмента качества сертифицирована по Международному стандарту ISO 9001;
- Лицензия ФСБ на осуществление работ с использованием сведений, составляющих государственную тайну;
- Поставка специализированных компонентов (Xilinx, Altera, Analog Devices, Intersil, Interpoint, Microsemi, Aeroflex, Peregrine, Syfer, Eurofarad, Texas Instrument, Miteq, Cobham, E2V, MA-COM, Hittite, Mini-Circuits,General Dynamics и др.);

Помимо этого, одним из направлений компании «ЭлектроПласт» является направление «Источники питания». Мы предлагаем Вам помощь Конструкторского отдела:

- Подбор оптимального решения, техническое обоснование при выборе компонента;
- Подбор аналогов;
- Консультации по применению компонента;
- Поставка образцов и прототипов;
- Техническая поддержка проекта;
- Защита от снятия компонента с производства.

Как с нами связаться

Телефон: 8 (812) 309 58 32 (многоканальный)
Факс: 8 (812) 320-02-42
Электронная почта: org@eplast1.ru
Адрес: 198099, г. Санкт-Петербург, ул. Калинина, дом 2, корпус 4, литера А.