PRODUCT NUMBER

SEE BELOW AND TABLE ON SHEET 2

74977 - X YY ZZZ LF

- BASE NUMBER
- LEAD FREE (OPTIONAL)
- SPECIAL LOAD PATTERN SEE SHEETS 6-7
- SIZE, SEE SHEET 2
- PLATING PERFORMANCE LEVEL, SEE SHEET 2

EYE OF NEEDLE PRESS FIT SECTION

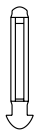

BABY-H PRESS FIT SECTION

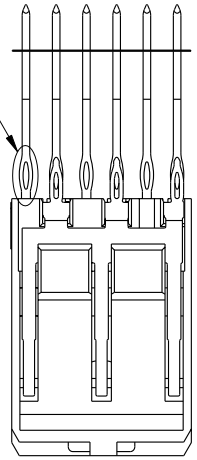

DETAIL A
SCALE 4:1
SEE NOTE 16

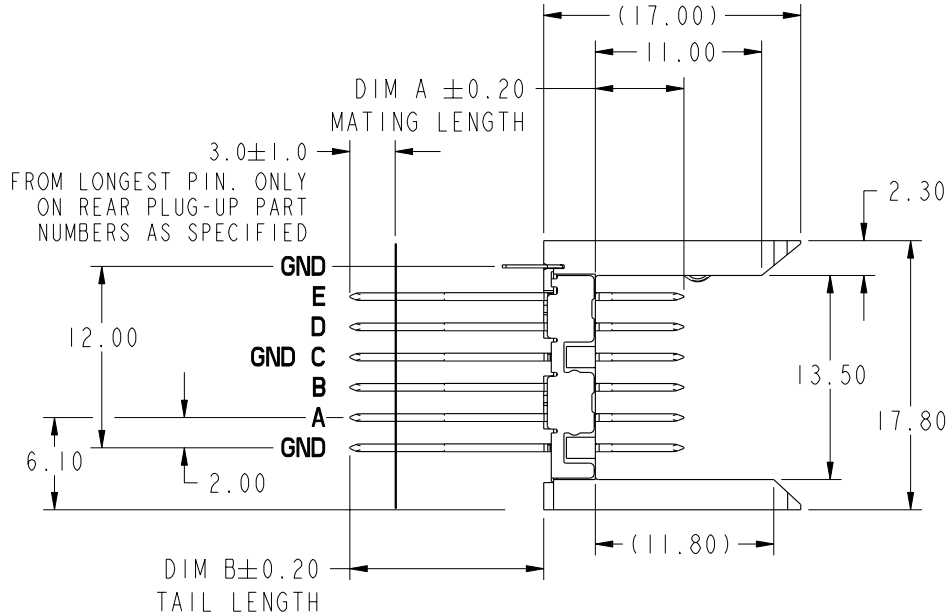

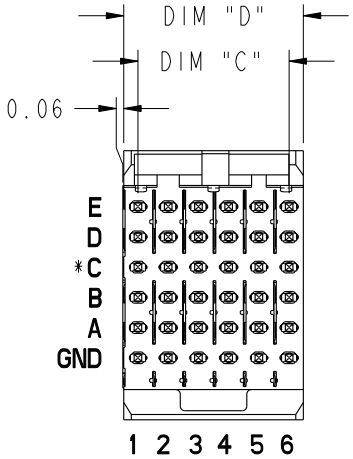

*ROW C INFORMATION
ODD NUMBER COLUMNS WITHIN ROW C ARE COMMONED TO GROUND INTERNALLY WITHIN THE HOUSING. THE EVEN NUMBER COLUMNS WITHIN ROW C ARE NOT. FOR MAXIMUM PERFORMANCE IT IS RECOMMENDED THESE EVEN COLUMNS BE GROUND COMMONED WITHIN PCB. SEE NOTE 13.

mat'l code SEE NOTE 5																			
ltr	ecn no.	dr	date																
Y	V06-0544	DCH	2006-06-09																
AA	V07-0167	DCH	2007-03-19																
AB	V07-0677	HTB	2007-11-14																
AC	V08-0008	LP	2008-1-22																
-	-	-	-																
W	V05-0814	VS	2005-09-19																
X	V06-0048	DAI	2006-02-08																
sheet index	revision		AC	AC	AC	AC	AC	AC	AC										
	sheet		1	2	3	4	5	6	7										

tolerances unless otherwise specified

linear	0.X ±0.1	
	0.XX ±.05	
	.XXX ±.020	
angles	0° ±2°	
dr	K. BELL	2000-03-29
engr	M. HAHN	2000-03-29
chr	M. HAHN	2000-03-29
appd	M. HAHN	2000-03-29

CUSTOMER COPY

projection

MM

scale 1:1

FCI www.fciconnect.com

title VERTICAL SIGNAL HDR 5 ROW PRESS-FIT, SPECIAL LOAD, STD.

product family METRAL 2000 | code 213

size A | dwg no 74977 | sheet 1 of 7

cage code 22526

Pro/E

This document is the property of and embodies CONFIDENTIAL and PROPRIETARY information of FCI. No part of the information shown on this document may be used in any way or disclosed to others without the written consent of FCI. Copyright FCI.

REV E - 2006-04-18

PDM: Rev:AC STATUS: Released Printed: May 13, 2011

PRODUCT NUMBER	PLATING PERFORM-ANCE LEVEL	SHROUD TO USE FOR REAR PLUG-UP APPLICATIONS	LENGTH DIM D	PIN FIELD DIM C	CONNECTOR SIZE
74977-101ZZZ	TELCORDIA CO	84621-101	11.88	10.00	1 MOD
74977-101ZZZLF		84621-101LF			
74977-102ZZZ		84621-102	23.88	22.00	2 MOD
74977-102ZZZLF		84621-102LF			
74977-103ZZZ		84621-103	35.88	34.00	3 MOD
74977-103ZZZLF		84621-103LF			
74977-104ZZZ		84621-104	47.88	46.00	4 MOD
74977-104ZZZLF		84621-104LF			
74977-501ZZZ	TELCORDIA UE	84621-501	11.88	10.00	1 MOD
74977-501ZZZLF		84621-501LF			
74977-502ZZZ		84621-502	23.88	22.00	2 MOD
74977-502ZZZLF		84621-502LF			
74977-503ZZZ		84621-503	35.88	34.00	3 MOD
74977-503ZZZLF		84621-503LF			
74977-504ZZZ		84621-504	47.88	46.00	4 MOD
74977-504ZZZLF		84621-504LF			
74977-901ZZZ	TELCORDIA CO	84621-101	11.88	10.00	1 MOD
74977-901ZZZLF		84621-101LF			
74977-902ZZZ		84621-102	23.88	22.00	2 MOD
74977-902ZZZLF		84621-102LF			
74977-903ZZZ		84621-103	35.88	34.00	3 MOD
74977-903ZZZLF		84621-103LF			
74977-904ZZZ		84621-104	47.88	46.00	4 MOD
74977-904ZZZLF		84621-104LF			

This document is the property of and embodies CONFIDENTIAL and PROPRIETARY information of FCI. No part of the information shown on this document may be used in any way or disclosed to others without the written consent of FCI. Copyright FCI.

mat'l code SEE NOTE 5				tolerances unless otherwise specified				CUSTOMER COPY	FCI www.fciconnect.com
ltr	ecn no.	dr	date	linear	0.X ±0.1			projection	title VERTICAL SIGNAL HDR 5 ROW PRESS-FIT, SPECIAL LOAD, STD.
AC					0.XX ±0.05				
					.XXX ±.020				
				angles	0° ±2°				
				dr	K. BELL	2000-03-29		MM	product family METRAL 2000 / code 213
				engr	M. HAHN	2000-03-29			size A / dwg no 74977
				chr	M. HAHN	2000-03-29		scale 2:1	sheet 2
				appd	M. HAHN	2000-03-29			
sheet index	revision sheet								

Pro/E

cage code 22526

REV E - 2006-04-18

PDM: Rev:AC STATUS: Released Printed: May 13, 2011

PRODUCT NUMBER
SEE SHEET 2

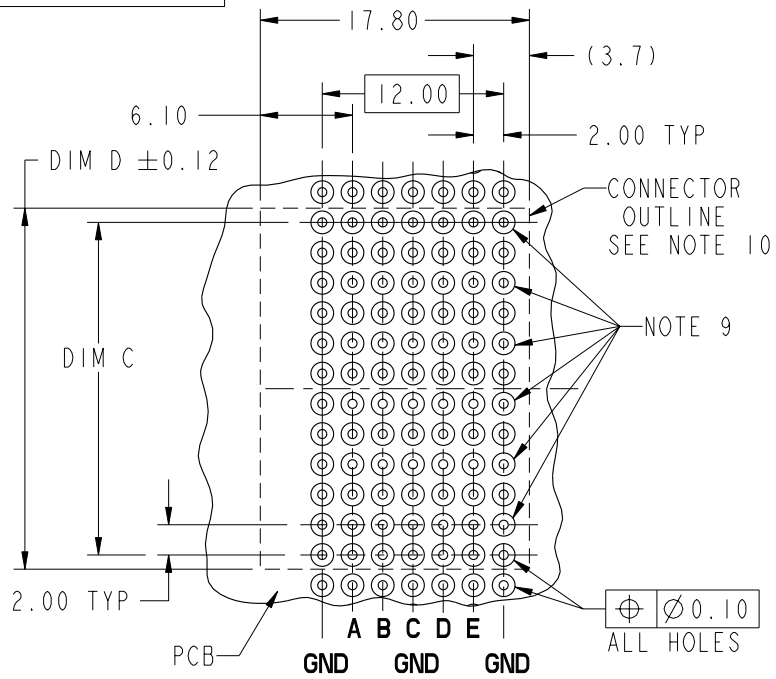

RECOMMENDED PCB HOLE PATTERN
(COMPONENT SIDE)

PRESS-FIT HOLES	OPTION 1
HOLE DIAMETER AFTER PLATING	0.65-0.80
DRILLED HOLE	0.81-0.86 (0.85 DRILL)
COPPER PLATING	0.025 MIN
SnPb PLATING	0.005-0.015

SEE PRINT 58351 FOR ADDITIONAL PCB INFORMATION

NOTES:
1. SEE APPLICATION SPECIFICATION GS-20-010 FOR INFORMATION ON AVAILABLE TOOLING, CIRCUIT BOARD DESIGN CONSIDERATIONS, REPAIR PROCEDURES AND PRODUCT OFFERINGS.
2. SEE FCI PUBLICATION 95051I-028 FOR "ELECTRICAL PERFORMANCE DATA FOR DIFFERENTIAL APPLICATIONS."
3. SEE FCI PUBLICATION 95051I-029 FOR "ELECTRICAL PERFORMANCE DATA FOR SINGLE-ENDED APPLICATION."
4. UNLESS OTHERWISE SPECIFIED, ALL DIMENSIONS AND TOLERANCES ARE IN ACCORDANCE WITH ASME Y14.5, 1994
5. HOUSING MATERIAL: LIQUID CRYSTAL POLYMER, 30% GLASS FILLED, FLAME RETARDANT PER UL 94-V0.
   PIN MATERIAL: PHOSPHER BRONZE
   GROUND SPRING MATERIAL: PHOSPHER BRONZE
   STRIPLINE SHIELD MATERIAL: PHOSPHER BRONZE
6. PLATING INFORMATION: PLATING ON CONTACT AREA MEETS THE PERFORMANCE LEVELS AS SHOWN IN TABLE ON SHEET 1. PLATING ON "LF" TAILS IS Sn. PLATING ON ALL OTHER TAILS IS SnPb.
7. DIMENSIONAL RESTRICTIONS OF PINS IN HEADERS.
   DIM A : 5.0mm MIN, 8.0mm MAX FOR ROWS A-E
   DIM A : 5.0mm MIN, 6.3mm MAX FOR ROW GND NEXT TO ROW A
   DIM C : 5.0mm MIN, 8.0mm MAX FOR ROWS A-E
   DIM C : 4.6mm MIN, 6.3mm MAX FOR ROW GND NEXT TO ROW A
8. THE MIN PCB THICKNESS FOR REAR PLUG-UP APPLICATIONS IS 2.9mm SINCE THE COMPLAINT SECTIONS OF THE GROUND SPRING OF THE HEADER DIRECTLY OPPOSE THE GROUND SPRING OF THE SHROUD. THE MIN PCB THICKNESS FOR FRONT PLUG-UP ONLY APPLICATIONS IS 1.6mm.
9. THESE HOLES ARE NEEDED FOR REAR PLUG-UP DESIGNS USING A SHROUD AND MAY BE OMITTED FOR FRONT PLUG-UP ONLY DESIGNS.
10. THE 'CONNECTOR OUTLINE' IS THE MIN OUTLINE REQUIRED. TO DETERMINE THE OUTLINE NECESSARY TO PERMIT THE VARIOUS TYPES OF REPAIR OPERATIONS, SEE APPLICATION SPECIFICATION GS-20-010.
11. CURRENT RATING : 1 AMP PER PIN
12. TEMPERATURE RANGE : -55°C TO +105°C
13. FOR FRONT PLUG-UP APPLICATIONS, THE EVEN NUMBERED PINS IN ROW 'C' CAN BE USED FOR POWER AS WELL AS FOR GROUND. IF THE SURROUNDING PINS ARE NOT USED FOR POWER, THEN EACH PIN CAN CARRY 3 AMPS. IF THE SURROUNDING PINS ARE USED FOR POWER, THEN EACH PIN CAN CARRY 1 AMP. WHEN THE SURROUNDING PINS ARE USED ONLY FOR LOW SPEED SIGNALS, THEN THE EVEN NUMBERED 'C' ROW PINS CAN ALSO BE USED FOR LOW SPEED SIGNALS. THIS IS NOT TRUE FOR REAR PLUG-UP APPLICATIONS USING METRAL 2000 SHROUD AS IN THIS CASE ALL 'C' ROW PINS ARE COMMON TO GROUND.
14. THE PRODUCTS WHERE THE PART NUMBERS ENDS IN LF MEET EUROPEAN UNION DIRECTIVES AND OTHER COUNTRY REGULATIONS AS DESCRIBED IN GS-22-008.
    ALL PRODUCTS WILL WITHSTAND EXPOSURE TO 260°C FOR 60 SECONDS IN A CONVECTION, INFRA-RED OR VAPOR PHASE REFLOW OVEN
15. FOR LEAD FREE PART NUMBERS ADD 'LF' SUFFIX. EXAMPLE: 74977-XYYZZZLF
16. PIN TYPE IS AT THE MANUFACTURERS OPTION AND CAN BE EITHER BABY-H OR EYE OF THE NEEDLE STYLE

mat'l code SEE NOTE 5				tolerances unless otherwise specified			CUSTOMER COPY	FCI www.fciconnect.com
ltr	ecn no.	dr	date	linear	0.X ±0.1			
AC					0.XX ±0.05		projection	title VERTICAL SIGNAL HDR 5 ROW PRESS-FIT, SPECIAL LOAD, STD.
					.XXX ±.020			
				angles	0° ±2°			
				dr	K. BELL	2000-03-29	MM	product family METRAL 2000 / code 213
				engr	M. HAHN	2000-03-29		size A / dwg no 74977
				chr	M. HAHN	2000-03-29	scale 1:1	sheet 3
				appd	M. HAHN	2000-03-29		
sheet index	revision sheet							

cage code 22526

Pro/E

This document is the property of and embodies CONFIDENTIAL and PROPRIETARY information of FCI. No part of the information shown on this document may be used in any way or disclosed to others without the written consent of FCI. Copyright FCI.

REV E - 2006-04-18

PDM: Rev:AC STATUS: Released Printed: May 13, 2011

PIN NO.	DIM A MATING LENGTH	DIM B TAIL LENGTH	PCB THICKNESS RANGE ACCOMMODATED BY PIN'S TAIL LENGTH				
			WHEN MATING TO A 73981 OR 84688 SERIES RECEPTACLE		WHEN MATING TO A 52057 SERIES METRAL 4000 RECEPTACLE		
			ROWS A,B,C,D,E	GROUND ROW	ROWS:A,B,D,E	ROW C	GROUND ROW
01*	5.00	4.30	1.60 MIN	1.60 MIN	1.60 MIN	1.60 MIN	1.60 MIN
22		12.20	2.95 - 3.80	2.95 - 4.20	2.95 - 3.80	2.95 - 3.80	2.95 - 4.20
30		12.95	2.95 - 4.55	3.25 - 4.95	2.95 - 4.55	2.95 - 4.55	3.25 - 4.95
05		13.70	2.95 - 5.30	4.00 - 5.70	3.30 - 5.30	2.95 - 5.30	4.00 - 5.70
35		14.45	3.05 - 6.05	4.75 - 6.45	4.05 - 6.05	3.05 - 6.05	4.75 - 6.45
48		15.20	3.80 - 6.80	5.50 - 7.20	4.80 - 6.80	3.80 - 6.80	5.50 - 7.20
40		15.70	4.30 - 7.30	6.00 - 7.70	5.30 - 7.30	4.30 - 7.30	6.00 - 7.70
65		16.40	5.00 - 8.00	6.70 - 8.40	6.00 - 8.00	5.00 - 8.00	6.70 - 8.40
09		17.10	5.70 - 8.70	7.40 - 9.10	6.70 - 8.70	5.70 - 8.70	7.40 - 9.10
02*	5.75	4.30	1.60 MIN	1.60 MIN	1.60 MIN	1.60 MIN	1.60 MIN
44		12.20	2.95 - 3.80	2.95 - 4.20	2.95 - 3.80	2.95 - 3.80	2.95 - 4.20
31		12.95	2.95 - 4.55	3.25 - 4.95	2.95 - 4.55	2.95 - 4.55	3.25 - 4.95
06		13.70	2.95 - 5.30	4.00 - 5.70	3.30 - 5.30	2.95 - 5.30	4.00 - 5.70
36		14.45	3.05 - 6.05	4.75 - 6.45	4.05 - 6.05	3.05 - 6.05	4.75 - 6.45
49		15.20	3.80 - 6.80	5.50 - 7.20	4.80 - 6.80	3.80 - 6.80	5.50 - 7.20
25		15.70	4.30 - 7.30	6.00 - 7.70	5.30 - 7.30	4.30 - 7.30	6.00 - 7.70
66		16.40	5.00 - 8.00	6.70 - 8.40	6.00 - 8.00	5.00 - 8.00	6.70 - 8.40
10		17.10	5.70 - 8.70	7.40 - 9.10	6.70 - 8.70	5.70 - 8.70	7.40 - 9.10
03*	6.50	4.30	1.60 MIN	1.60 MIN	1.60 MIN	1.60 MIN	1.60 MIN
45		12.20	2.95 - 3.80	2.95 - 4.20	2.95 - 3.80	2.95 - 3.80	2.95 - 4.20
32		12.95	2.95 - 4.55	3.25 - 4.95	2.95 - 4.55	2.95 - 4.55	3.25 - 4.95
07		13.70	2.95 - 5.30	4.00 - 5.70	3.30 - 5.30	2.95 - 5.30	4.00 - 5.70
37		14.45	3.05 - 6.05	4.75 - 6.45	4.05 - 6.05	3.05 - 6.05	4.75 - 6.45
50		15.20	3.80 - 6.80	5.50 - 7.20	4.80 - 6.80	3.80 - 6.80	5.50 - 7.20
41		15.70	4.30 - 7.30	6.00 - 7.70	5.30 - 7.30	4.30 - 7.30	6.00 - 7.70
24		16.40	5.00 - 8.00	6.70 - 8.40	6.00 - 8.00	5.00 - 8.00	6.70 - 8.40
11		17.10	5.70 - 8.70	7.40 - 9.10	6.70 - 8.70	5.70 - 8.70	7.40 - 9.10

This document is the property of and embodies CONFIDENTIAL and PROPRIETARY information of FCI. No part of the information shown on this document may be used in any way or disclosed to others without the written consent of FCI. Copyright FCI.

mat'l code SEE NOTE 5

ltr	ecn no.	dr	date
AC			

tolerances unless otherwise specified

linear	0.X ±0.1	
	0.XX ±0.05	
	.XXX ±.020	
angles	0° ±2°	
dr	K. BELL	2000-03-29
engr	M. HAHN	2000-03-29
chr	M. HAHN	2000-03-29
appd	M. HAHN	2000-03-29

CUSTOMER COPY

projection

MM

scale 1:1

www.fciconnect.com

title VERTICAL SIGNAL HDR 5 ROW PRESS-FIT, SPECIAL LOAD, STD.

product family METRAL 2000

code 213

size A

dwg no 74977

sheet 4

sheet index | revision sheet

cage code 22526

Pro/E

REV E - 2006-04-18

PDM: Rev:AC STATUS: Released Printed: May 13, 2011

PIN NO.	DIM A MATING LENGTH	DIM B TAIL LENGTH	PCB THICKNESS RANGE ACCOMMODATED BY PIN LENGTH				
			WHEN MATING TO A 73981 OR 84688 SERIES RECEPTACLE		WHEN MATING TO A 52057 SERIES METRAL 4000 RECEPTACLE		
			ROWS A,B,C,D,E	GROUND ROW	ROWS:A,B,D,E	ROW C	GROUND ROW
04*	7.25	4.30	1.60 MIN	1.60 MIN	1.60 MIN	1.60 MIN	1.60 MIN
46		12.20	2.95 - 3.80	2.95 - 4.20	2.95 - 3.80	2.95 - 3.80	2.95 - 4.20
33		12.95	2.95 - 4.55	3.25 - 4.95	2.95 - 4.55	2.95 - 4.55	3.25 - 4.95
08		13.70	2.95 - 5.30	4.00 - 5.70	3.30 - 5.30	2.95 - 5.30	4.00 - 5.70
38		14.45	3.05 - 6.05	4.75 - 6.45	4.05 - 6.05	3.05 - 6.05	4.75 - 6.45
51		15.20	3.80 - 6.80	5.50 - 7.20	4.80 - 6.80	3.80 - 6.80	5.50 - 7.20
42		15.70	4.30 - 7.30	6.00 - 7.70	5.30 - 7.30	4.30 - 7.30	6.00 - 7.70
67		16.40	5.00 - 8.00	6.70 - 8.40	6.00 - 8.00	5.00 - 8.00	6.70 - 8.40
12		17.10	5.70 - 8.70	7.40 - 9.10	6.70 - 8.70	5.70 - 8.70	7.40 - 9.10
19*	8.00	4.30	1.60 MIN	1.60 MIN	1.60 MIN	1.60 MIN	1.60 MIN
47		12.20	2.95 - 3.80	2.95 - 4.20	2.95 - 3.80	2.95 - 3.80	2.95 - 4.20
34		12.95	2.95 - 4.55	3.25 - 4.95	2.95 - 4.55	2.95 - 4.55	3.25 - 4.95
20		13.70	2.95 - 5.30	4.00 - 5.70	3.30 - 5.30	2.95 - 5.30	4.00 - 5.70
39		14.45	3.05 - 6.05	4.75 - 6.45	4.05 - 6.05	3.05 - 6.05	4.75 - 6.45
52		15.20	3.80 - 6.80	5.50 - 7.20	4.80 - 6.80	3.80 - 6.80	5.50 - 7.20
43		15.70	4.30 - 7.30	6.00 - 7.70	5.30 - 7.30	4.30 - 7.30	6.00 - 7.70
68		16.40	5.00 - 8.00	6.70 - 8.40	6.00 - 8.00	5.00 - 8.00	6.70 - 8.40
21		17.10	5.70 - 8.70	7.40 - 9.10	6.70 - 8.70	5.70 - 8.70	7.40 - 9.10

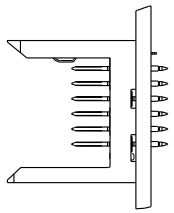

STUB MOUNT

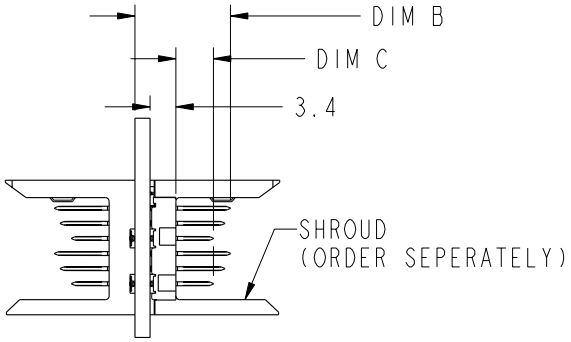

REAR PLUG-UP

mat'l code SEE NOTE 5				tolerances unless otherwise specified				CUSTOMER COPY	FCI www.fciconnect.com
ltr	ecn no.	dr	date	linear	0.X ±0.1			projection	title VERTICAL SIGNAL HDR 5 ROW PRESS-FIT, SPECIAL LOAD, STD.
AC					0.XX ±0.05				
					.XXX ±.020				
				angles	0° ±2°				
				dr	K. BELL	2000-03-29		MM	product family METRAL 2000 / code 213
				engr	M. HAHN	2000-03-29			size A / dwg no 74977
				chr	M. HAHN	2000-03-29		scale 1:1	sheet 5
				appd	M. HAHN	2000-03-29			
sheet index	revision sheet								

cage code 22526

Pro/E

This document is the property of and embodies CONFIDENTIAL and PROPRIETARY information of FCI. No part of the information shown on this document may be used in any way or disclosed to others without the written consent of FCI. Copyright FCI.

REV E - 2006-04-18

PDM: Rev:AC STATUS: Released Printed: May 13, 2011

SPECIAL LOAD PATTERNS

PRODUCT #	ROW	PIN CODES	
74977-XYY001 SEE NOTE 15 LEAD FREE OPTION	E	01	
	D		
	C		
	B		
	A		
	GND		
74977-XYY002 *RPU SEE NOTE 15 LEAD FREE OPTION	E	22	PCB THICKNESS RANGE FOR REAR PLUG UP APPLICATIONS 2.95 TO 3.80mm
	D		
	C		
	B		
	A		
	GND		
74977-XYY003 *RPU SEE NOTE 15 LEAD FREE OPTION	E	30	PCB THICKNESS RANGE FOR REAR PLUG UP APPLICATIONS 3.25 TO 4.55mm
	D		
	C		
	B		
	A		
	GND		
74977-XYY011 SEE NOTE 15 LEAD FREE OPTION	E	02	
	D		
	C		
	B		
	A		
	GND	01	
74977-XYY012 *RPU SEE NOTE 15 LEAD FREE OPTION	E	44	PCB THICKNESS RANGE FOR REAR PLUG UP APPLICATIONS 2.95 TO 3.80mm
	D		
	C		
	B		
	A		
	GND	22	

SPECIAL LOAD PATTERNS

PRODUCT #	ROW	PIN CODES	
74977-XYY013 *RPU SEE NOTE 15 LEAD FREE OPTION	E	06	PCB THICKNESS RANGE FOR REAR PLUG UP APPLICATIONS 3.25 TO 4.55mm
	D		
	C		
	B		
	A		
	GND	30	
74977-XYY021 SEE NOTE 15 LEAD FREE OPTION	E	03	
	D		
	C		
	B		
	A		
	GND	02	
74977-XYY050 SEE NOTE 15 LEAD FREE OPTION	E	02	
	D		
	C	04	
	B	02	
	A		
	GND		
74977-XYY051 *RPU SEE NOTE 15 LEAD FREE OPTION	E	25	PCB THICKNESS RANGE FOR REAR PLUG UP APPLICATIONS 5.50 TO 7.20mm
	D		
	C		
	B		
	A		
	GND	49	

* REAR PLUG-UP PART NUMBER

mat'l code SEE NOTE 5				tolerances unless otherwise specified			CUSTOMER COPY	FCI www.fciconnect.com
ltr	ecn no.	dr	date					
AC				linear	0.X ±0.1		projection	title VERTICAL SIGNAL HDR 5 ROW PRESS-FIT, SPECIAL LOAD, STD.
					0.XX ±0.05			
					.XXX ±.020			
				angles	0° ±2°			
				dr	K. BELL	2000-03-29	MM	product family METRAL 2000 / code 213
				engr	M. HAHN	2000-03-29		size A / dwg no 74977
				chr	M. HAHN	2000-03-29	scale 1:1	sheet 6
				appd	M. HAHN	2000-03-29		
sheet index	revision sheet							

cage code 22526

Pro/E

This document is the property of and embodies CONFIDENTIAL and PROPRIETARY information of FCI. No part of the information shown on this document may be used in any way or disclosed to others without the written consent of FCI. Copyright FCI.

REV E - 2006-04-18

PDM: Rev:AC STATUS: Released Printed: May 13, 2011

SPECIAL LOAD PATTERNS

PRODUCT #	ROW	PIN CODES
74977-XYY052 SEE NOTE 15 LEAD FREE OPTION	E	01
	D	
	C	03
	B	01
	A	
	GND	
74977-XYY053 SEE NOTE 15 LEAD FREE OPTION	E	02
	D	
	C	
	B	
	A	
	GND	-
74977-XYY054 *RPU SEE NOTE 15 LEAD FREE OPTION	E	25
	D	
	C	
	B	
	A	
	GND	-
74977-XYY055 *RPU SEE NOTE 15 LEAD FREE OPTION	E	06
	D	
	C	
	B	
	A	
	GND	02

PCB THICKNESS RANGE FOR REAR PLUG UP APPLICATIONS *4.30 TO 7.30mm

PCB THICKNESS RANGE FOR REAR PLUG UP APPLICATIONS *2.95 TO 5.30mm

*REAR PLUG-UP PART NUMBER WITH PIN ALIGNER
***REAR PLUG-UP PART NUMBER WITHOUT PIN ALIGNER

SPECIAL LOAD PATTERNS

PRODUCT #	ROW	PIN CODES
74977-XYY056 *RPU SEE NOTE 15 LEAD FREE OPTION	E	22
	D	
	C	45
	B	22
	A	
	GND	
74977-XYY057 SEE NOTE 15 LEAD FREE OPTION	E	02
	D	
	C	
	B	
	A	01
	GND	02
74977-XYY058 ***RPU SEE NOTE 15 LEAD FREE OPTION	E	22
	D	
	C	45
	B	22
	A	
	GND	
74977-XYY059 SEE NOTE 15 LEAD FREE OPTION	E	03
	D	
	C	19
	B	03
	A	
	GND	02

PCB THICKNESS RANGE FOR REAR PLUG UP APPLICATIONS 2.95 TO 3.80mm

mat'l code SEE SHEET 5				tolerances unless otherwise specified			CUSTOMER COPY	FCI www.fciconnect.com
ltr	ecn no.	dr	date	linear	0.X ±0.1			
AC					0.XX ±0.05		projection	title VERTICAL SIGNAL HDR 5 ROW PRESS-FIT, SPECIAL LOAD, STD.
					.XXX ±.020			
				angles	0° ±2°			
				dr	K. BELL	2000-03-29	MM	product family METRAL 2000 / code 213
				engr	M. HAHN	2000-03-29		size A / dwg no 74977
				chr	M. HAHN	2000-03-29	scale 1:1	sheet 7
				appd	M. HAHN	2000-03-29		
sheet index	revision sheet							

Pro/E

cage code 22526

This document is the property of and embodies CONFIDENTIAL and PROPRIETARY information of FCI. No part of the information shown on this document may be used in any way or disclosed to others without the written consent of FCI. Copyright FCI.

REV E - 2006-04-18

PDM: Rev:AC STATUS: Released Printed: May 13, 2011

Компания «ЭлектроПласт» предлагает заключение долгосрочных отношений при поставках импортных электронных компонентов на взаимовыгодных условиях!

Наши преимущества:

- Оперативные поставки широкого спектра электронных компонентов отечественного и импортного производства напрямую от производителей и с крупнейших мировых складов;
- Поставка более 17-ти миллионов наименований электронных компонентов;
- Поставка сложных, дефицитных, либо снятых с производства позиций;
- Оперативные сроки поставки под заказ (от 5 рабочих дней);
- Экспресс доставка в любую точку России;
- Техническая поддержка проекта, помощь в подборе аналогов, поставка прототипов;
- Система менеджмента качества сертифицирована по Международному стандарту ISO 9001;
- Лицензия ФСБ на осуществление работ с использованием сведений, составляющих государственную тайну;
- Поставка специализированных компонентов (Xilinx, Altera, Analog Devices, Intersil, Interpoint, Microsemi, Aeroflex, Peregrine, Syfer, Eurofarad, Texas Instrument, Miteq, Cobham, E2V, MA-COM, Hittite, Mini-Circuits,General Dynamics и др.);

Помимо этого, одним из направлений компании «ЭлектроПласт» является направление «Источники питания». Мы предлагаем Вам помощь Конструкторского отдела:

- Подбор оптимального решения, техническое обоснование при выборе компонента;
- Подбор аналогов;
- Консультации по применению компонента;
- Поставка образцов и прототипов;
- Техническая поддержка проекта;
- Защита от снятия компонента с производства.

Как с нами связаться

Телефон: 8 (812) 309 58 32 (многоканальный)
Факс: 8 (812) 320-02-42
Электронная почта: org@eplast1.ru
Адрес: 198099, г. Санкт-Петербург, ул. Калинина, дом 2, корпус 4, литера А.